E-10

Crankshaft - Piston

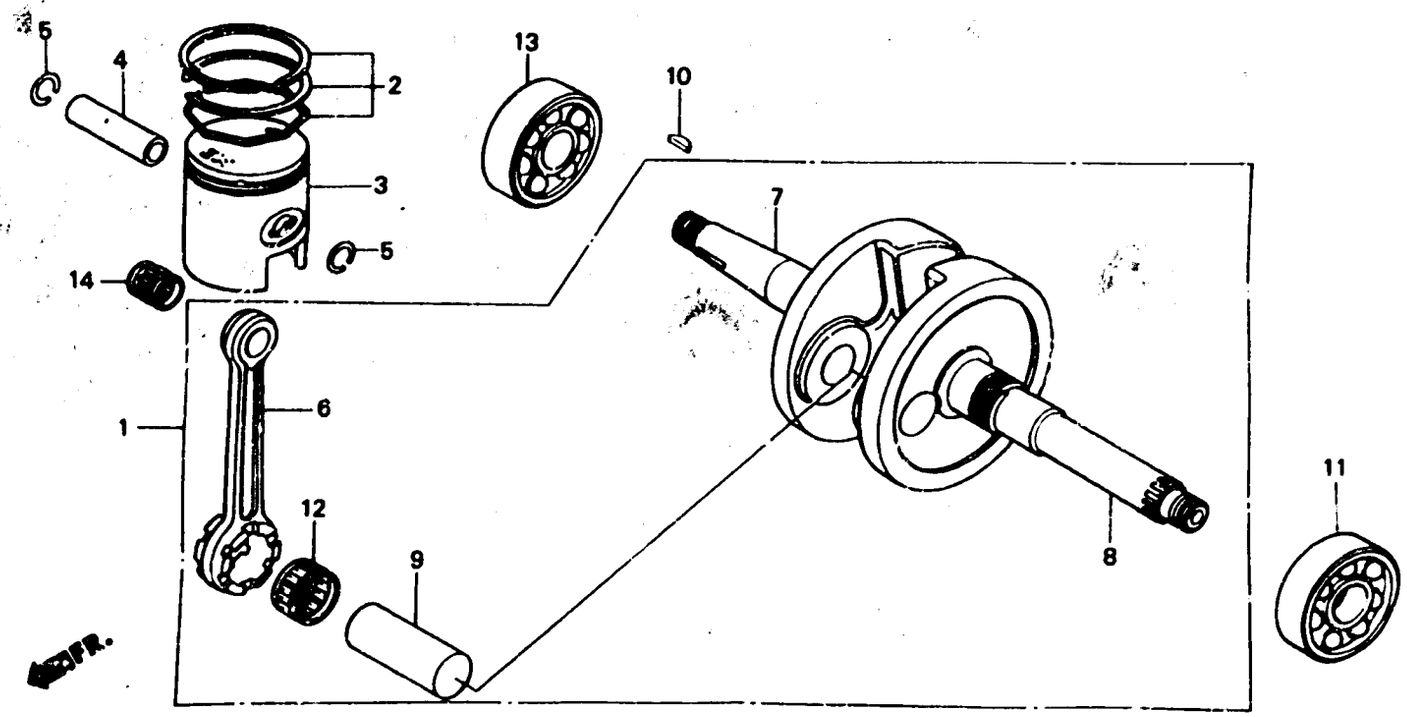

GY18 - E1C00

Service item	F.R.T.
CRANKSCHAFT COMP.	*3.0
RING SET, PISTON	0.9
● PISTON	
● PIN, PISTON	
ROD, CONNECTING	(ACTUAL TIME)
(INC RELATIVE PART)	
BEARING, RADIAL BALL, 6203	*2.8
(L. SIDE 2.9)	
(ADD 0.2 FOR EACH.)	

Ref. No.	Part No.	Description	Reqd No SA50 M	Reqd No SA50 SM
1	13000-GN2-600	CRANKSHAFT COMP.	1	1
2	13011-GY1-305	RING SET, PISTON (STD.)	(1)	(1)
3	13101-GN2-671	PISTON (-0.035 → -0.040)	1	1
	13102-GN2-671	PISTON (-0.040 → -0.045)	1	1
	13103-GN2-671	PISTON (-0.030 → -0.035)	1	1
4	13111-GK8-000	PIN, PISTON	1	1
5	13115-147-000	CLIP, PISTON PIN, 10 MM	2	2
6	13201-GN2-600	ROD, CONNECTING	1	1
7	13311 GN2-600	CRANKSHAFT, R.	1	1
8	13321-GN2-600	CRANKSHAFT, L.	1	1
9	13381-GN2-600	PIN, CRANK	1	1
10	90741-035-000	KEY, WOODRUFF, 3X5	1	1
11	91001-GM4-023	BEARING, SPECIAL RADIAL BALL (6204)	1	1
12	91001-122-004	BEARING, CONNECTING ROD BIG END (KOYO) (RED)	1	1

Serial No. Area code

Selection table of piston and cylinder

Cylinder \ Piston	No mark	A	B
A or No mark	○	×	×
A	×	○	×
No mark	×	×	○
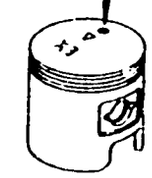
Mark of piston