REAR WHEEL

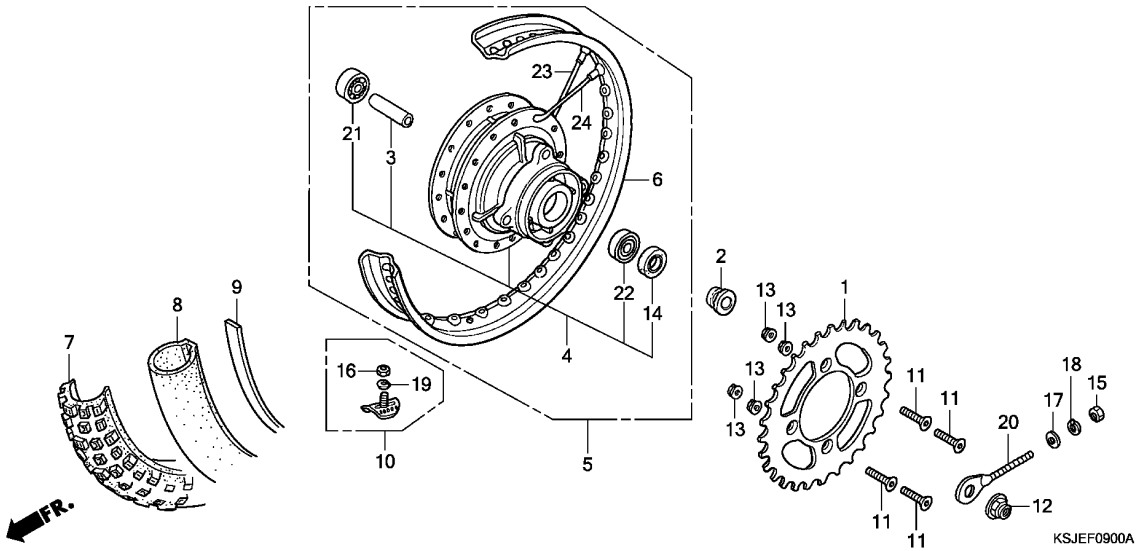

Ref. No.	L.O.N.	(Relative ref. Number) Description	F.R.T.
1	7101A0	SPROCKET, FINAL DRIVEN ·····	0.4
4	710121	HUB, REAR WHEEL ·····	2.3
5	710118	REAR WHEEL ·····	0.9
6	710127	RIM, WHEEL :REAR ·····	2.2
7		(9)	
	710142	REAR TIRE(ONE) ·····	0.8
8		(9)	
	7101A7	TUBE, REAR TIRE(ONE) ·····	0.8
21		(3,22)	
	710133	BEARING, REAR WHEEL(ONE) ·····	0.5
	710133G	.Replace 1 bearing add ·····	0.1

Ref. No.	Part No.	Description	Reqd. QTY CRF80F 8	CRF80F 9	CRF80F B	CRF100F 8	CRF100F 9	CRF100F A	CRF100F B	Serial No.	Parts catalogue code
1	41201-GN1-000	SPROCKET, FINAL DRIVEN(46T) ·	1	1	1	-	-	-	-		
	41201-KN4-000	SPROCKET, FINAL DRIVEN(50T) ·	-	-	-	1	1	1	1		
2	42311-GC4-000	COLLAR, RR. WHEEL SIDE ·····	1	1	1	1	1	1	1		
3	42620-GC4-000	COLLAR, RR. AXLE DISTANCE ···	1	1	1	1	1	1	1		
4	42635-KN4-A60	HUB SUB ASSY., RR. ·····	1	1	1	-	-	-	-		
	42635-KSJ-000	·····	-	-	-	1	1	1	1		
5	42650-GN1-681	WHEEL SUB ASSY., RR. ·····	1	1	1	-	-	-	-		
	42650-KSJ-010	·····	-	-	-	1	1	1	1		
6	42701-GN1-013	RIM, RR. WHEEL ·····	1	1	1	-	-	-	-		
	42701-KN4-013	·····	-	-	-	1	1	1	1		
7	42711-169-015	TIRE, RR.(IRC) (3.60-14 4PR/43P)	1	1	1	-	-	-	-		
	42711-KSJ-007	TIRE, RR.(CHENG SHIN) (90/100-16 M/C 51M T/T)	-	-	-	1	1	1	1		
8	42712-169-005	TUBE, TIRE(IRC)(3.60-14) ····	1	1	1	-	-	-	-		
	42712-KSJ-007	TUBE, TIRE(CHENG SHIN) (90/100-16)	-	-	-	1	1	1	1		
9	42713-116-671	FLAP, RR. TUBE(IRC) ·····	1	1	1	-	-	-	-		
	42713-KSJ-007	FLAP, TIRE(CHENG SHIN) ·····	-	-	-	1	1	1	1		
10	44715-MA0-770	STOPPER, BEAD(1.60) ·····	1	1	1	1	1	1	1		
11	90125-KA4-000	SCREW, FLAT, 8X31 ·····	4	4	4	4	4	4	4		
12	90306-KF0-003	NUT, FLANGE, 12MM ·····	1	1	1	1	1	1	1		
13	90309-KF0-003	NUT, FLANGE, 8MM ·····	4	4	4	4	4	4	4		
14	90755-GC4-003	DUST SEAL, 21X37X5.5(ARAI) ··	1	1	1	1	1	1	1		
	90755-GC4-005	DUST SEAL, 21X37X5.5(NOK) ···	-	-	1	-	-	-	1		
15	94001-06000-0S	NUT, HEX., 6MM ·····	1	1	1	1	1	1	1		