FUEL TANK

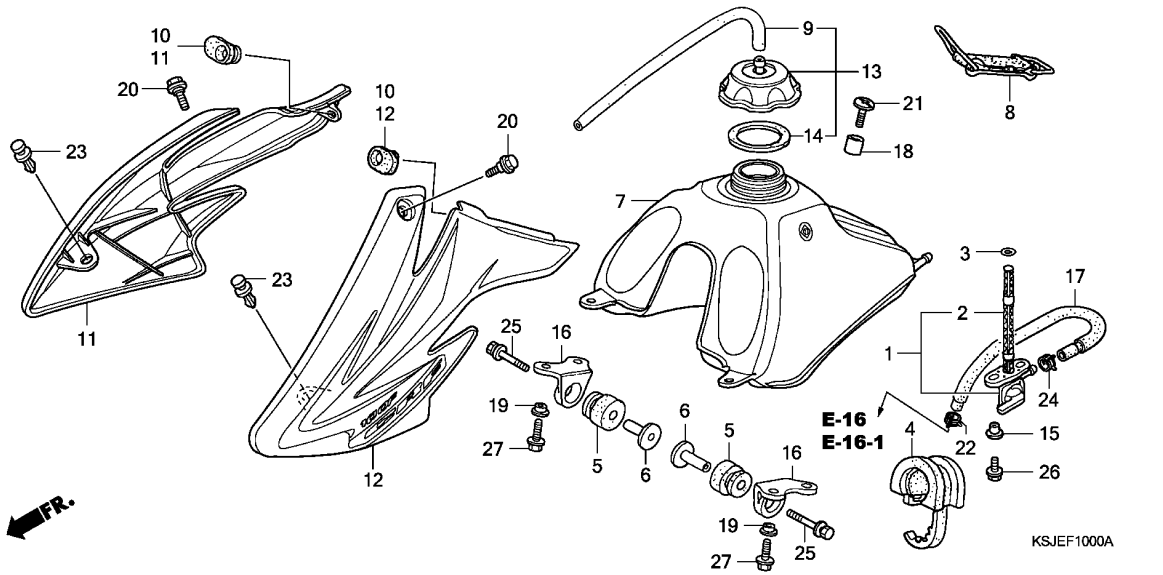

Ref. No.	Part No.	Description	Reqd. QTY CRF80F 8	CRF80F 9	CRF80F B	CRF100F 8	CRF100F 9	CRF100F A	CRF100F B	Serial No.	Parts catalogue code
16	17634-KZ3-860	BRACKET, FR. FUEL TANK ------	2	2	2	2	2	2	2		
17	17681-GFW-A20	TUBE, FUEL ----------	1	1	1	-	-	-	-		
	17681-KSJ-A20	----------	-	-	-	1	1	1	1		
18	83607-356-000	COLLAR, BATTERY LOWER -------	1	1	1	1	1	1	1		
19	84706-415-000	COLLAR ----------	4	4	4	4	4	4	4		
20	90113-GF0-000	BOLT, FLANGE, 6MM ----------	2	2	2	2	2	2	2		
21	90381-GZ5-000	SCREW, SPECIAL, 6X17 --------	1	1	1	1	1	1	1		
22	90652-KSJ-A21	CLAMP, TUBE(8.0) ----------	1	1	1	1	1	1	1		
23	90653-HC4-900	CLIP, MUDGUARD ----------	2	2	2	2	2	2	2		
24	90653-KSJ-A20	CLAMP, TUBE(8.5) ----------	1	1	1	1	1	1	1		
25	93404-06040-00	BOLT-WASHER, 6X40 ----------	2	2	2	2	2	2	2		
26	96001-06014-00	BOLT, FLANGE, 6X14 ----------	2	2	2	2	2	2	2		
27	96001-06016-00	BOLT, FLANGE, 6X16 ----------	4	4	4	4	4	4	4		