F-17

Air cleaner

Filtre à air

Luftfilter

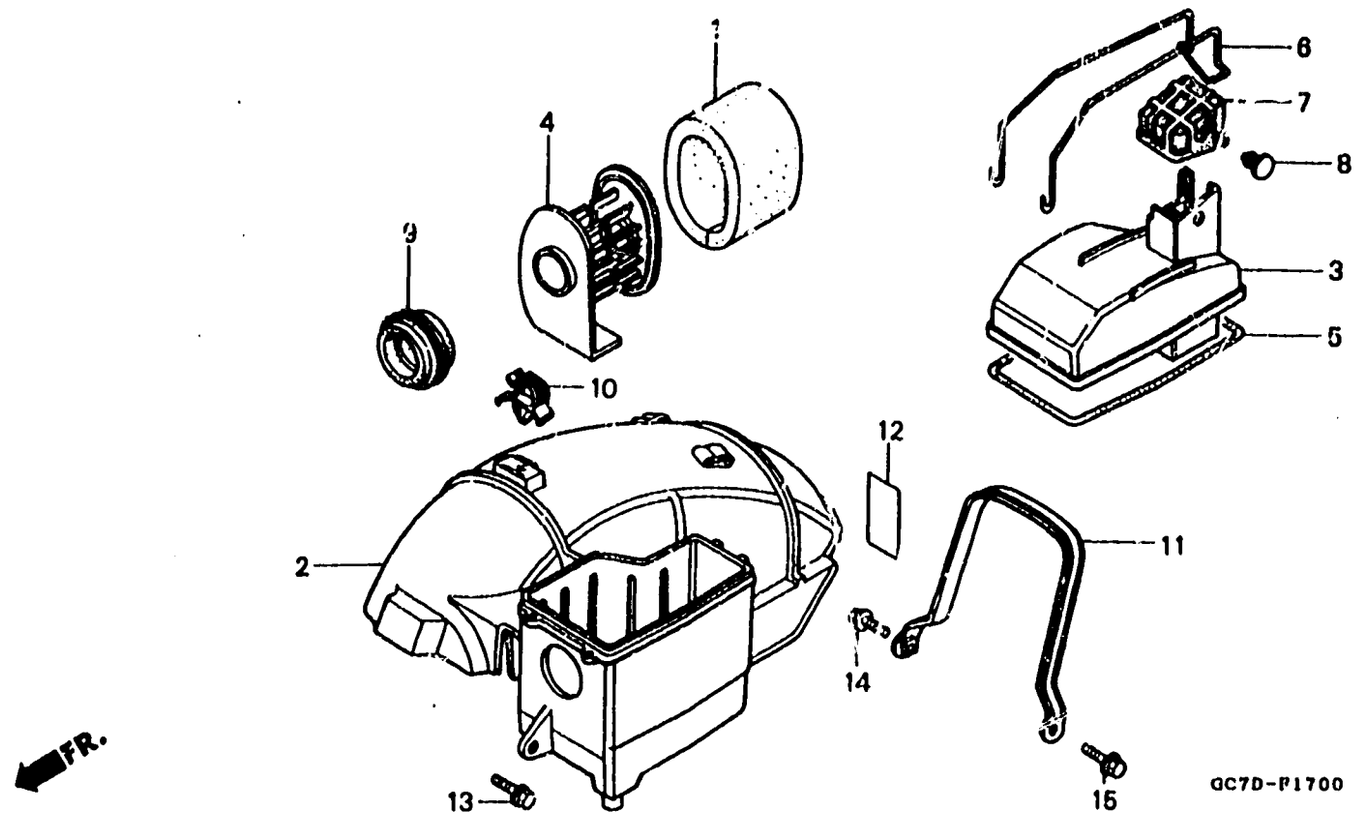

Item d'entretien	T.D.R.	N° de réf.	N° de pièce	Description	N° de requis NH50M DD	NH50M SD	NH50M SE	NH50M DE	NH80M DD	NH80M SD	NH80M DE	N° de série		Code de zone
		9	17253-GC8-000	TUBE DE RACCORD FILTRE A AIR	1	–	–	–	–	–	–	.....	1164768	AR,GR,SW,1K
					1	–	–	–	–	–	–	.....	.....	1L
					–	1	1	1	–	–	–			
					–	–	–	–	1	1	–	.....	1045679	B,E,F,G,U,1L
					–	–	–	–	1	–	1	.....	.....	CM
		*	17253-GC8-010	TUBE DE RACCORD FILTRE A AIR	1	–	–	–	–	–	–	1164769	.....	AR,GR,SW,1K
					1	–	–	–	–	–	–	1600001	.....	1K
					–	–	–	–	1	–	–	1045680	1058601	B,1L
					–	–	–	–	1	1	–	1045680	.....	E,F,G,U
		*	17253-GC8-020	TUBE DE RACCORD FILTRE A AIR	–	–	–	–	1	–	–	1058602	.....	B,1L
					–	–	–	–	1	–	–	1300001	.....	1L
		10	32161-393-003	AGRAFE DE FAISCEAU ELECTRIQUE	1	1	1	1	1	1	1			
		11	80106-GC8-000	APPUI DE GARDE-BOUE AR.	1	1	1	1	1	1	1			
		12	87507-429-820	PLAQUE D'AVERTISSEMENT DE FILTRE A AIR (FRANCAIS)	–	–	–	–	1	1	1	.....	.....	CM,F
			87508-GA7-770	ETIQUETTE, " ATTENTION FILTRE AIR"	1	–	–	–	1	–	–	.....	.....	1L
			87508-120-000	ETIQUETTE, " ATTENTION FILTRE AIR"	1	1	1	1	1	1	1	.....	.....	AR,B,CM,E,G GR,SW,U,1K
		13	90111-182-000	BOULON DE BRIDE, 6MM	1	1	1	1	1	1	1			
		14	95700-06012-00	BOULON DE BRIDE, 6X12	1	1	1	1	1	1	1			
		15	95700-06020-00	BOULON DE BRIDE, 6X20	1	1	1	1	1	1	1			