CRANKSHAFT/PISTON

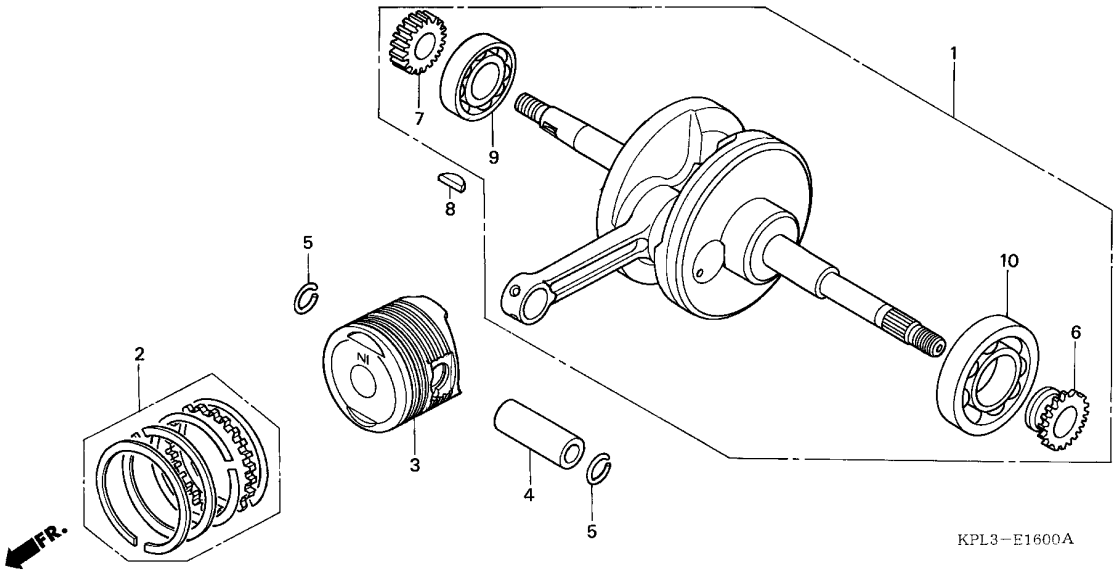

Ref. No.	L.O.N.	(Relative ref. Number) Description	F.R.T.
1	1101B5	CRANKSHAFT	3.9
		.INCLUDES: Engine removal and installation	
3		(2,4,5)	
	111103	RING, PISTON AND/OR PISTON (ONE)	2.0
		.INCLUDES: Engine removal and installation	
6	1101C8	SPROCKET, TIMING	4.1
		.INCLUDES: Engine removal and installation	
7	1131B8	GEAR, OIL PUMP DRIVE	4.1
		.INCLUDES: Engine removal and installation	
9	1101B7	BEARING, CRANKSHAFT :RIGHT ...	4.3
		.INCLUDES: Engine removal and installation	
	1101G0	BEARING, CRANKSHAFT :BOTH	4.5
		.INCLUDES: Engine removal and installation	
		.INCLUDES: Timing sprocket	
10	1101B6	BEARING, CRANKSHAFT :LEFT	4.3
		.INCLUDES: Engine removal and installation	
		.INCLUDES: Timing sprocket	

Ref. No.	Part No.	Description	Reqd. QTY SCV100CM 2	Reqd. QTY SCV100CM 5	Serial No.	Parts catalogue code
1	13000-KPL-900	CRANKSHAFT COMP.	1	-		
	13000-KPL-840	.....	-	1		
2	13011-KPL-900	RING SET, PISTON (STD.)	1	1		
	13021-KPL-900	RING SET, PISTON (0.25)	(1)	(1)		
	13031-KPL-900	RING SET, PISTON (0.50)	(1)	(1)		
	13041-KPL-900	RING SET, PISTON (0.75)	(1)	(1)		
	13051-KPL-900	RING SET, PISTON (1.00)	(1)	(1)		
3	13101-KPL-900	PISTON (STD.)	1	1		
	13102-KPL-900	PISTON (0.25)	(1)	(1)		
	13103-KPL-900	PISTON (0.50)	(1)	(1)		
	13104-KPL-900	PISTON (0.75)	(1)	(1)		
	13105-KPL-900	PISTON (1.00)	(1)	(1)		
4	13111-087-000	PIN, PISTON	1	1		
5	13115-001-000	CLIP, PISTON PIN	2	2		
6	14311-KPL-900	SPROCKET, TIMING (17T)	1	1		
7	15131-KPL-900	GEAR, OIL PUMP DRIVE (28T) ..	1	1		
8	90741-KPL-900	KEY, WOODRUFF	1	1		
9	91001-GCC-000	BEARING, RADIAL BALL, 6205Z .	1	1		
10	91002-GCC-000	BEARING, RADIAL BALL SPECIAL, 6007	1	1		