F-13 FUEL TANK

G 5

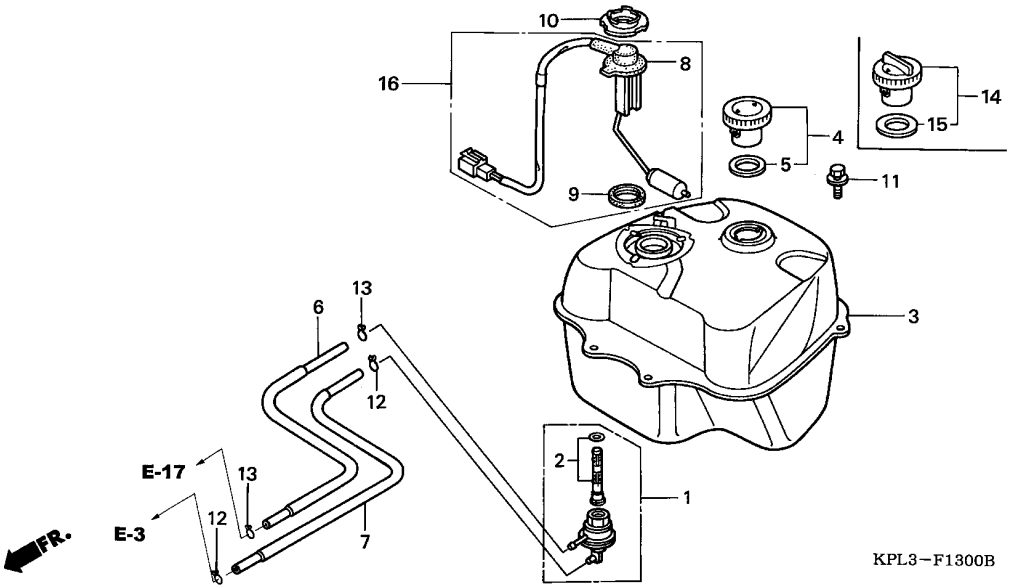

Ref. No.	L.O.N.	(Relative ref. Number) Description	F.R.T.
1	3101A3	COCK, FUEL AUTO	0.4
2	310115	SCREEN, FUEL STRAINER	0.4
3	310100	TANK, FUEL	0.5
8		(16)	
	617105	FUEL TANK SENDING UNIT	0.4

Ref. No.	Part No.	Description	Reqd. QTY SCV100CM 2	Reqd. QTY SCV100CM 5	Serial No.	Parts catalogue code
1	16950-KPL-900	COCK ASSY., FUEL AUTO	1	-		
	16950-KRP-980	COCK ASSY., FUEL	-	1		
2	16952-KPL-900	SCREEN SET, FUEL STRAINER	1	-		
	16952-KRP-980		-	1		
3	17500-KPL-901	TANK COMP., FUEL	1	-		
	17500-KPL-840		-	1		
4	17620-KEM-900	CAP COMP., FUEL FILLER	1	-		
5	17631-KEM-900	PACKING, FUEL FILLER CAP	1	-		
6	17683-KPL-900	TUBE COMP., FUEL	1	1		
7	17684-KPL-901	TUBE COMP., VACUUM	1	-		
	17684-KPL-840		-	1		
8	37800-KPL-901	FUEL UNIT	1	-		
9	37801-GA7-700	PACKING, BASE	1	1		
10	37802-GA7-700	RETAINER, FUEL UNIT	1	1		
11	93404-06012-08	BOLT-WASHER, 6X12	2	2		
12	95002-02070	CLIP, TUBE (B7)	2	2		
13	95002-02080	CLIP, TUBE (B8)	2	2		
14	17620-KRP-980	CAP COMP., FUEL FILLER	-	1		
15	17632-383-831	PACKING, FUEL FILLER CAP	-	1		
16	37080-KPL-840	FUEL UNIT SET	-	1		