F - 26 - 2

Stripe
(WIN 100 Semi Trail)

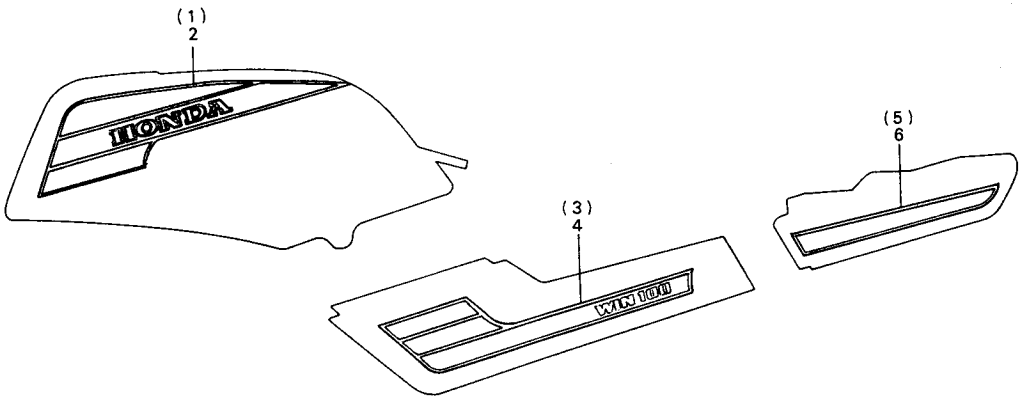

BGF6-34

Bagian yang diservis Service item	F.R.T. F.R.T.	Nomor Petunjuk Ref. No.	Nomor Part Part No.	Nama Part Description	Jumlah Regd. No. WIN	 WIN100	Nomor Serie Serial No.	Catatan Area Code
		1	87121-GF6-111	STRIPE, R. FUEL TANK	–	1		
		2	87122-GF6-111	STRIPE, L. FUEL TANK	–	1		
		3	87123-GF6-111	STRIPE A, R. SIDE COVER	–	1		
		4	87124-GF6-111	STRIPE A, L. SIDE COVER	–	1		
		5	87125-GF6-111	STRIPE B, R. SIDE COVER	–	1		
		6	87126-GF6-111	STRIPE B, L. SIDE COVER	–	1		