F-20 REAR CUSHION

G12

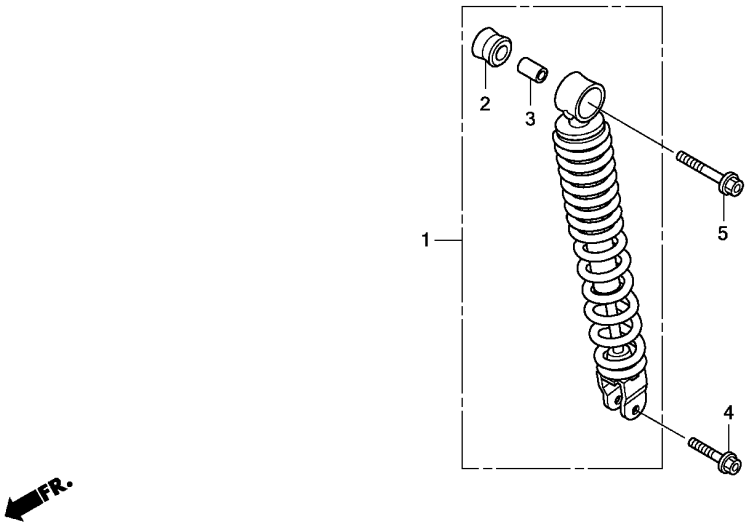

Ref. No.	L.O.N.	(Relative ref. Number) Description	F.R.T.
1	512115	CUSHION ASSY., REAR ----------	0.4

Ref. No.	Part No.	Description	Reqd. QTY ANC110 CCM9	Reqd. QTY ACC110 SCB	Serial No.	Parts catalogue code
1	52400-KVY-971	CUSHION ASSY., RR.(SHOWA) ---	1	1		
2	52485-KVY-901	BUSH, RUBBER ----------	1	1		
3	52486-GA7-003	COLLAR, RUBBER BUSH(SHOWA) --	1	1		
4	95801-08032-00	BOLT, FLANGE, 8X32 ----------	1	1		
5	95801-10035-00	BOLT, FLANGE, 10X35 ---------	1	1		

3