CAM CHAIN/TENSIONER

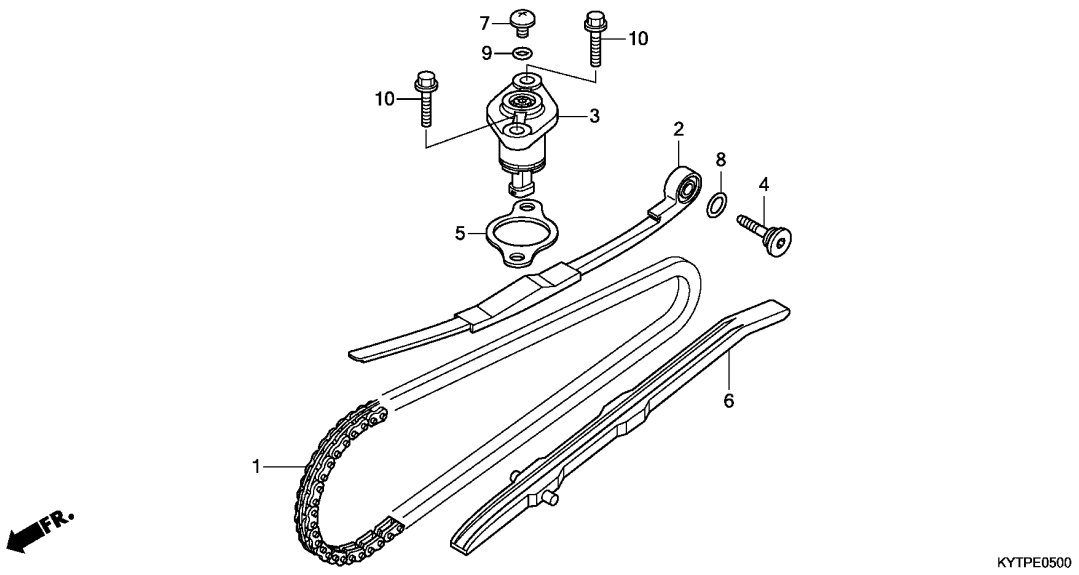

Ref. No.	L.O.N.	(Relative ref. Number) Description	F.R.T.
1	110140	CHAIN, CAM ----------	3.9
		.INCLUDES: Engine removal and installation	
2	111130	TENSIONER, CAM CHAIN ---------	1.3
3		(5)	
	111133	LIFTER, TENSIONER ----------	0.7
6	111139	GUIDE, CAM CHAIN ----------	1.7

Ref. No.	Part No.	Description	Reqd. QTY ACD110 CSC	Reqd. QTY ACD110 SC	Serial No.	Parts catalogue code
1	14401-KVB-901	CHAIN, CAM(90L)(DAIDO) ------	1	1		
2	14510-KVB-900	TENSIONER, CAM CHAIN --------	1	1		
3	14520-KVY-901	LIFTER ASSY., TENSIONER -----	1	1		
4	14531-KVY-900	PIVOT, CAM CHAIN TENSIONER --	1	1		
5	14560-KCW-851	GASKET, TENSIONER LIFTER ----	1	1		
6	14611-KVB-900	GUIDE, CAM CHAIN ----------	1	1		
7	90005-KY7-000	SCREW, PAN, 6X6 ----------	1	1		
8	91301-GR0-004	O-RING, 15.2X1.5 ----------	1	1		
9	91306-MG3-000	O-RING, 1.5X9.5 ----------	1	1		
10	95701-06022-00	BOLT, FLANGE, 6X22 ----------	2	2		