E-6 CYLINDER

D 6

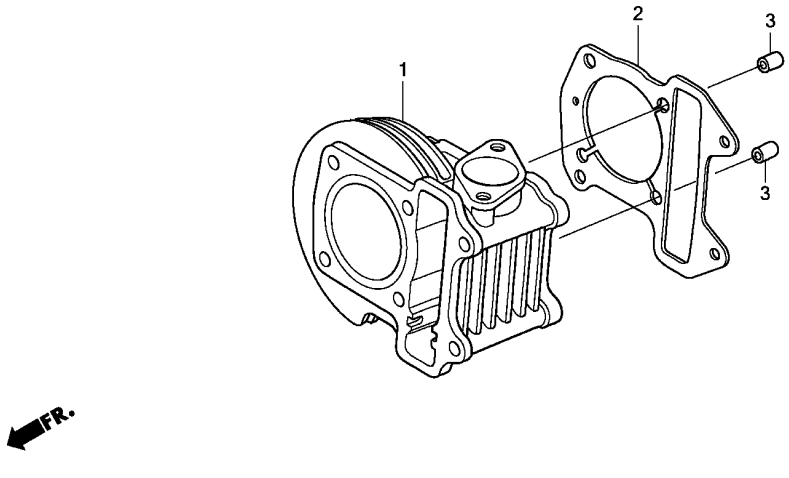

Ref. No.	L.O.N.	(Relative ref. Number) Description	F.R.T.
1	1111A5	CYLINDER	2.1
2	111102	GASKET, CYLINDER	2.0

Ref. No.	Part No.	Description	Reqd. QTY ACD110 CSC	Reqd. QTY ACD110 SC	Serial No.	Parts catalogue code
1	12100-KVY-900	CYLINDER COMP.	1	1		
2	12191-KVY-901	GASKET, CYLINDER	1	1		
3	90701-KFM-900	DOWEL PIN, SPECIAL, 8X14	2	2		

2