F-26 FUEL TANK

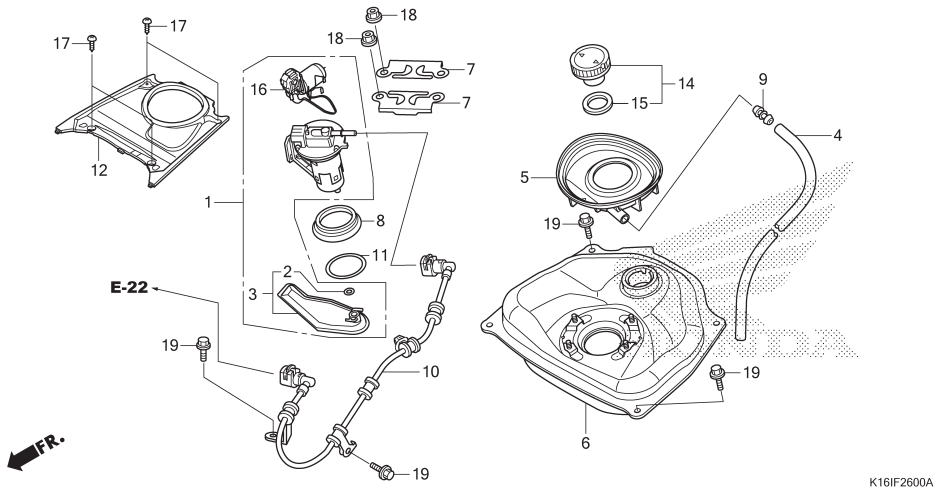

No. Ref.	L.O.N.	(Nomor ref. relatif) Deskripsi	F.R.T.
1		(8)	
	310120	PUMP ASSY., FUEL	0,4
3		(2)	
	3101C7	FILTER, FUEL	0,5
6	310100	TANK, FUEL	0,7
10	310162	HOSE, FUEL FEED	0,5
12	413121	COVER, FUEL TANK TOP	0,1
16	617105	FUEL TANK SENDING UNIT	0,5

No. Ref.	No. Part	Deskripsi	Jumlah SCOOPY PGM-FI (ACF110CSF) 2012(D)	2014(E)	No. Seri	Kode Parts Catalog
1	16700-K16-305	PUMP ASSY., FUEL	1	-		
	16700-K46-N01	PUMP UNIT, FUEL	-	1		
2	16706-KVB-S51	O-RING(P7)	1	1		
3	16707-KVB-S51	FILTER SET	1	1		
4	17260-K16-900	TUBE, DRAIN	1	1		
5	17505-K16-900	TRAY, FUEL	1	1		
6	17510-K16-P90	TANK COMP., FUEL	1	-		
	17510-K16-900		-	1		
7	17517-GGL-J00	RETAINER, FUEL PUMP	2	2		
8	17518-GGL-J00	DUST SEAL	1	1		
9	17525-KBN-900	JOINT, FUEL TUBE	1	1		
10	17528-K16-901	HOSE COMP., FUEL FEED	1	1		
11	17572-GGL-J00	O-RING, FUEL PUMP	1	1		
12	17575-K16-900	COVER, FUEL TANK	1	1		
14	17620-KGH-600	CAP, FUEL FILLER	1	1		
15	17631-KEV-900	PACKING, FUEL FILLER CAP	1	1		
16	37800-K16-901	FUEL UNIT	1	-		
	37800-K46-N01		-	1		
17	93903-24380	SCREW, TAPPING, 4X12	4	4		
18	94050-06000	NUT, FLANGE, 6MM	4	4		
19	95701-06012-00	BOLT, FLANGE, 6X12	6	6		