F-21 FUEL TANK

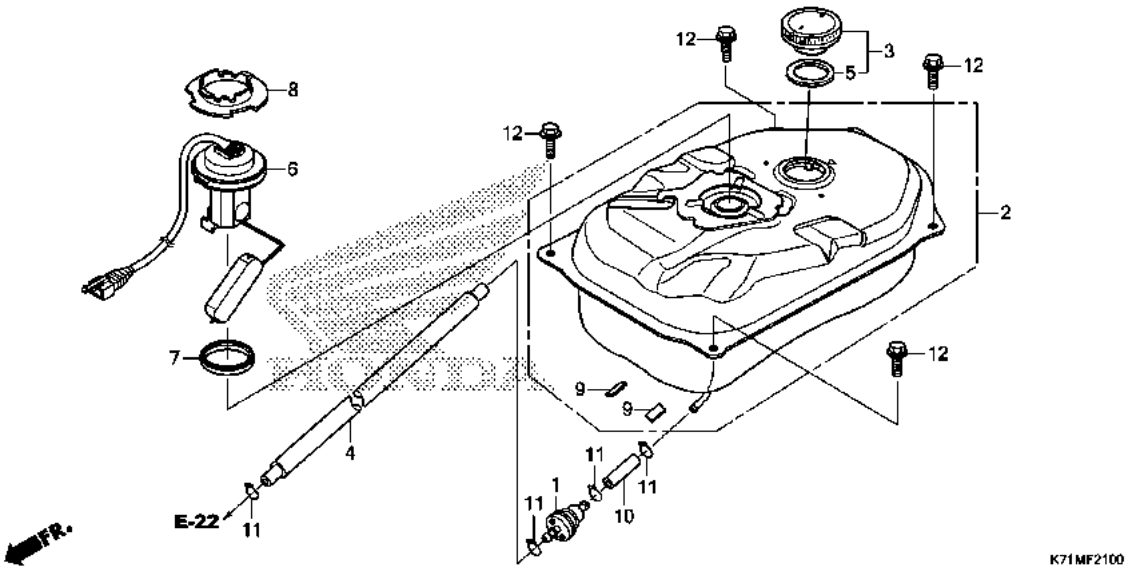

Ref. No.	L.O.N.	(Relative ref. Number) Description	F.R.T.
1	310160	STRAINER, FUEL	0.5
2	310100	TANK, FUEL	0.7
4	3101B5	TUBE, FUEL	0.5
6		(7)	
	617105	FUEL TANK SENDING UNIT	0.8

Ref. No.	Part No.	Description	Reqd. QTY AFS110 MCS L	Reqd. QTY AFS110 MD L	Serial No.	Parts catalogue code
1	16910-KFM-902	STRAINER COMP., FUEL	1	1		
2	17500-K71-M00	TANK ASSY., FUEL	1	1		
3	17620-KGH-600	CAP, FUEL FILLER	1	1		
4	17630-KWW-A00	TUBE, FUEL, 5.3X580	1	1		
5	17631-KEV-900	PACKING, FUEL FILLER CAP	1	1		
6	37800-K71-M01	FUEL UNIT	1	1		
7	37801-GA7-700	PACKING, BASE	1	1		
8	37802-GA7-700	RETAINER, FUEL UNIT	1	1		
9	81257-KWC-900	RUBBER, PROTECTOR	2	2		
10	95001-55045-40	TUBE, FUEL, 5.3X45 (95001-55001-60M)	1	1		
11	95002-02100	CLIP, TUBE(B10)	4	4		
12	95701-06012-08	BOLT, FLANGE, 6X12	4	4		

3