E - 6

Right crankcase cover

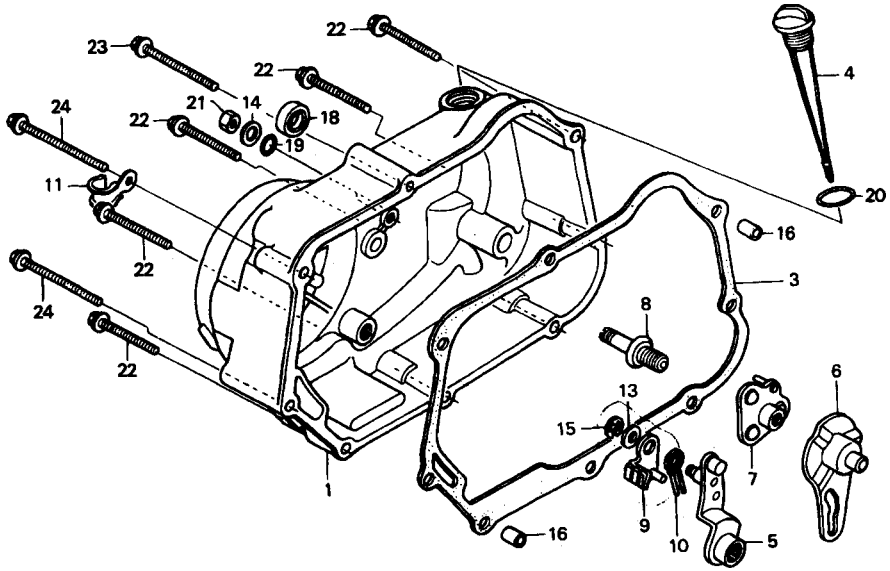

KRST

Service item	F.R.T.	No.	Part Number	Description	Q'ty	Notes
GASKET, R. CRANKCASE COVER	0.6	1	11330-KRS-A00	COVER COMP., R. CRANKASE	1	
.OIL SEAL, 13.8X24X5		3	11394-KFL-850	GASKET, R. CRANKCASE COVER	1	
LEVER COMP., CLUTCH	0.7	4	15651-GN5-640	GAUGE, OIL LEVEL	1	
.LIFTER COMP. CLUTCH		5	22810-GN5-910	LEVER COMP., CLUTCH	1	
COVER COMP., R. CRANKCASE	0.8	6	22823-KFL-850	PLATE, CLUTCH LIFTER CAM	1	
		7	22840-KFL-850	LIFTER COMP	1	
		8	22846-GN5-910	BOLT, CLUTCH ADJUSTING	1	
		9	22850-KFM-900	PLATE COMP., BRAKE	1	
		10	22853-KEV-900	SPRING, BRAKE	1	
		11	32921-039-000	CLIP, DYNAMO CORD	1	
		13	90443-884-000	WASHER, THRUST, 8MM	1	
		14	90845-040-000	WASHER, 8MM	1	
		15	90605-166-720	CIRCLIP, 7MM	1	
		16	90702-KFM-900	PIN, DOWEL, 8X12	2	
		18	91202-KFL-841	OIL SEAL, 13.8X24X5	1	
		19	91303-001-000	O-RING, 8MM	1	
		20	91307-035-000	O-RING, 18X3	1	

08.08.2003