F-16-1 AIR SUCTION VALVE

G 2

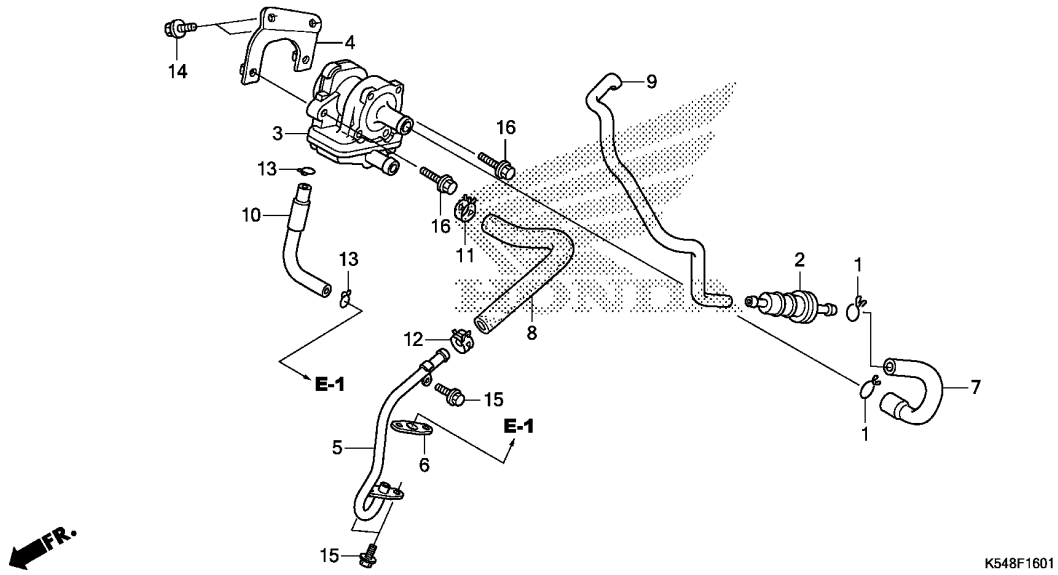

Ref. No.	L.O.N.	(Relative ref. Number) Description	F.R.T.
2	3141B4	FILTER, SECONDARY AIR SUPPLY	0.3
3	31413O	VALVE, SECONDARY AIR CONTROL	0.5
5		(6)	
	3111D1	PIPE, SECONDARY AIR	0.4

Ref. No.	Part No.	Description	Reqd. QTY ANF125MWHF	Serial No.	Parts catalogue code
1	15771-KV6-000	CLIP, OIL DRAIN TUBE	2		
2	17260-KPH-C00	FILTER COMP., AIR	1		
3	18600-KPH-W00	VALVE ASSY., AIR SUCTION	1		
4	18620-KPH-C00	STAY, AIR SUCTION VALVE	1		
5	18640-KPH-C00	PIPE COMP., AIR FEED	1		
6	18645-KPH-C00	GASKET, AIR FEED PIPE	1		
7	18652-KPH-900	TUBE A(AI)	1		
8	18653-KPH-900	TUBE B(AI)	1		
9	18654-KPH-900	TUBE C(AI)	1		
10	18655-KPH-900	TUBE, PB(ASV)	1		
11	19509-KPH-900	CLAMP, TUBE(D19)	1		
12	90678-MN5-000	CLIP, FUEL HOSE	1		
13	95002-02070	CLIP, TUBE(B7)	2		
14	95701-06008-00	BOLT, FLANGE, 6X8	2		
15	96001-06016-00	BOLT, FLANGE, 6X16	3		
16	96001-06018-00	BOLT, FLANGE, 6X18	2		

3