F - 11

RR. Brake Master Cylinder

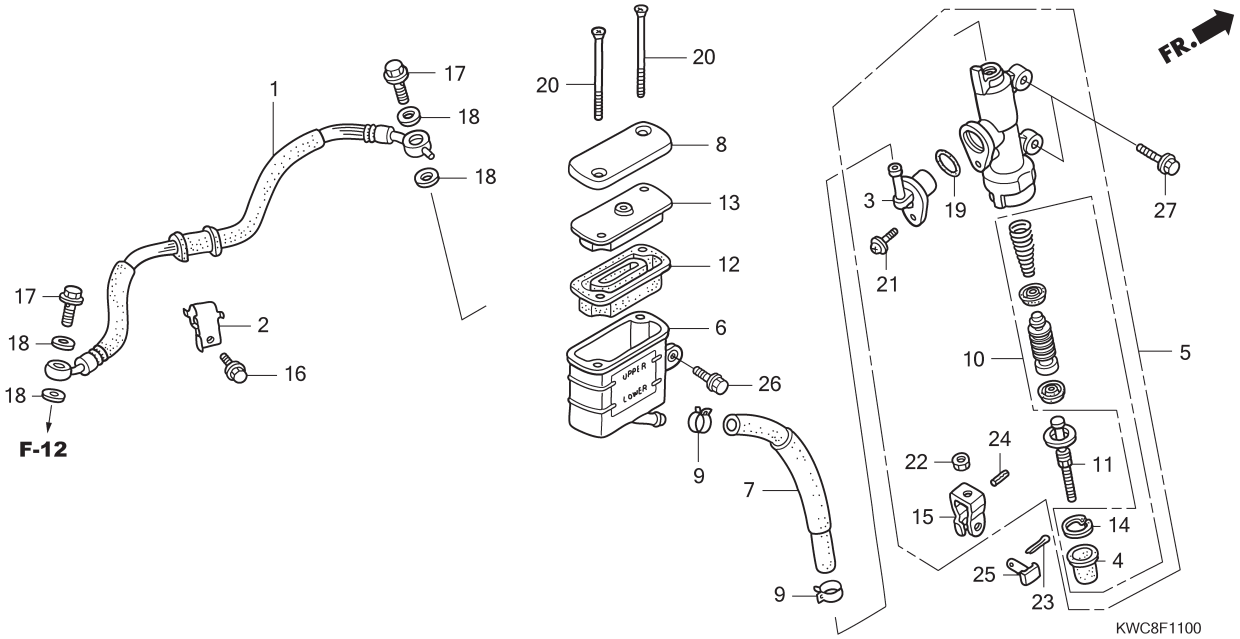

Service item	F.R.T.
1 HOSE, REAR BRAKE	0.4
.INCLUDES: Bleed brakes	
5 CYLINDER, REAR BRAKE MASTER	0.6
.INCLUDES: Bleed brakes	
6 CUP, REAR MASTER CYLINDER OIL	0.3
7 HOSE, REAR MASTER CYLINDER OIL CUP	0.4
10 PISTON SET, REAR BRAKE MASTER	0.7
.INCLUDES: Bleed brakes	
12 DIAPHRAGM, REAR BRAKE MASTER CYLINDER	0.2

No.	Part Number	Description	QTY	Notes
1	43310-KGH-731	HOSE COMP., RR. BRAKE	1	
2	43432-KW6-961	CLAMPER, RR. BRAKE HOSE	1	
3	43503-MR7-007	CONNECTOR	1	
4	43504-MB2-007	BOOT COMP.	1	
5	43510-KGH-902	CYLINDER SUB ASSY., RR. BRAKE MASTER	1	
6	43511-KW7-882	CUP COMP., OIL	1	
7	43512-KGH-902	HOSE COMP., RR. BRAKE MASTER CYLINDER	1	
8	43513-KBP-882	CAP, MASTER CYLINDER	1	
9	43514-KS6-701	CLAMP, MASTER CYLINDER OIL HOSE	2	
10	43520-MJ6-315	PISTON SET, MASTER CYLINDER	1	
11	43530-KBA-922	ROD COMP., PUSH	1	
12	45520-GW0-912	DIAPHRAGM	1	
13	45521-GW0-911	PLATE, DIAPHRAGM	1	
14	46182-MEL-D21	CIRCLIP	1	
15	46504-KV6-703	JOINT, BRAKE ROD	1	
16	90102-KGH-900	BOLT, FLANGE, 6X10	1	
17	90145-KM3-751	BOLT, OIL, 10X22	2	
18	90545-300-000	WASHER, OIL BOLT	4	
19	91212-422-006	O-RING, 14.8X2.4	1	
20	93600-04045-1G	SCREW, FLAT, 4X45	2	