C 14

E-11 Transmission

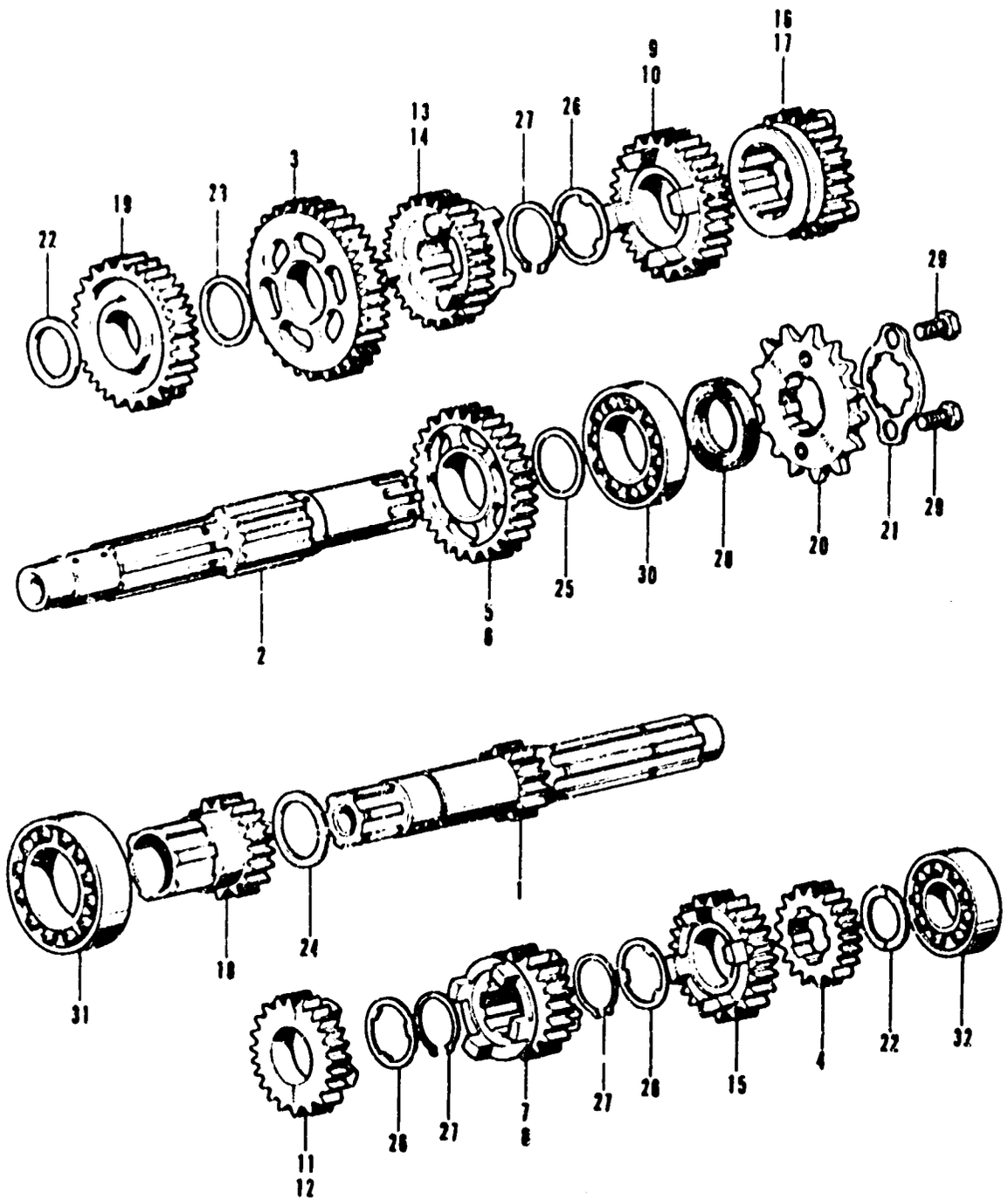

Ref. No.	Part No.	Description	Reqd. No. SL125	Remarks
1	23211-331-010	SHAFT, transmission main (13T)	1	
2	23221-107-000	SHAFT, transmission counter	1	
3	23421-331-010	GEAR COMP., counter shaft low (36T)	1	
4	23441-107-000	GEAR, main shaft second (18T)	1	
5	23451-331-670	(Superseded by 23451-331-671) (Used in U.S.A.)	1	SL125S-1000001~1008401
	23451-331-671	GEAR, counter shaft second (31T) (Used in U.S.A.)	1	SL125S-1008402~
6	23451-107-000	GEAR, counter shaft second (31T) (Used in France)	1	
7	23461-331-670	GEAR, main shaft third (22T) (Used in U.S.A.)	1	
8	23461-331-000	GEAR, main shaft third (22T) (Used in France)	1	
9	23471-331-670	GEAR, counter shaft third (28T) (Used in U.S.A.)	1	
10	23471-107-000	GEAR, counter shaft third (28T) (Used in France)	1	
11	23481-107-000	GEAR, main shaft fourth (24T) (Used in U.S.A.)	1	
12	23481-331-000	GEAR, main shaft fourth (25T) (Used in France)	1	
13	23491-331-670	GEAR, counter shaft fourth (25T) (Used in U.S.A.)	1	
14	23491-331-000	GEAR, counter shaft fourth (25T) (Used in France)	1	
15	23501-331-010	GEAR, main shaft top (27T)	1	
16	23511-331-670	GEAR, counter shaft top (22T) (Used in U.S.A.)	1	
17	23511-331-010	GEAR, counter shaft top (23T) (Used in France)	1	
18	23520-107-000	GEAR COMP., primary starter (19T)	1	
19	23530-107-000	GEAR COMP., primary starter idle (30T)	1	
20	23801-524-000	SPROCKET, drive (15T)	1	