E-16 DRIVE FACE

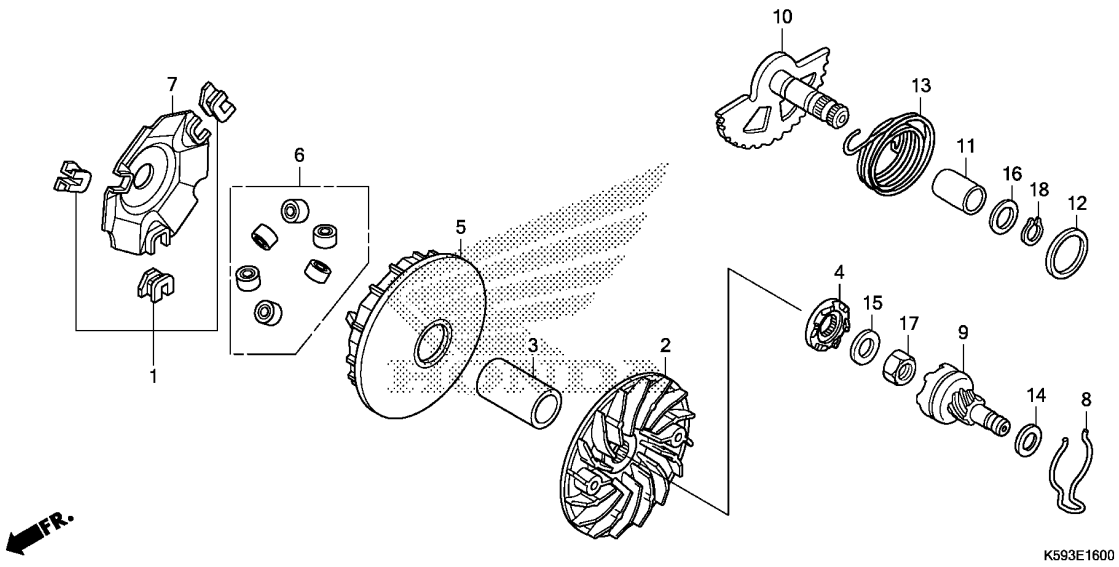

Ref. No.	L.O.N.	(Relative ref. Number) Description	F.R.T.
2		(4)	
	2111A0	FACE, DRIVE	0.4
5	2111A1	FACE, MOVABLE DRIVE	0.4
6		(1,7)	
	2111A4	ROLLER, WEIGHT	0.4
9		(8)	
	1121A9	GEAR, KICK STARTER DRIVEN	0.2
10	1121A2	SPINDLE, KICK STARTER	0.4
13	112103	SPRING, KICK STARTER RETURN	0.4

Ref. No.	Part No.	Description	Reqd. QTY ACB150CBT H	Serial No.	Parts catalogue code
1	22011-KWN-900	PIECE SET, SLIDE	1		
2	22102-KZR-600	FACE, DRIVE	1		
3	22105-KWN-900	BOSS, DRIVE FACE	1		
4	22109-KZL-840	RATCHET, STARTER	1		
5	22110-K36-A00	FACE COMP., MOVABLE DRIVE	1		
6	22123-K36-T00	ROLLER SET, WEIGHT	1		
7	22131-KWN-900	PLATE, RAMP	1		
8	28223-KZL-840	SPRING, KICK DRIVEN GEAR	1		
9	28230-KZR-600	GEAR COMP., KICK DRIVEN(7T)	1		
10	28250-KZR-600	SPINDLE COMP., KICK STARTER	1		
11	28253-KVB-900	BUSH, KICK SPINDLE	1		
12	28255-GS6-000	COLLAR, KICK BOSS	1		
13	28281-KZL-C00	SPRING, KICK RETURN	1		
14	90412-KZL-840	WASHER, THRUST, 10MM	1		
15	90426-KVB-900	WASHER, SPECIAL, 14MM	1		
16	90439-443-740	WASHER, 16X22	1		
17	94030-14200	NUT, HEX., 14MM	1		
18	94511-16000	CIRCLIP, EXTERNAL, 16MM	1		