E-23 THROTTLE BODY

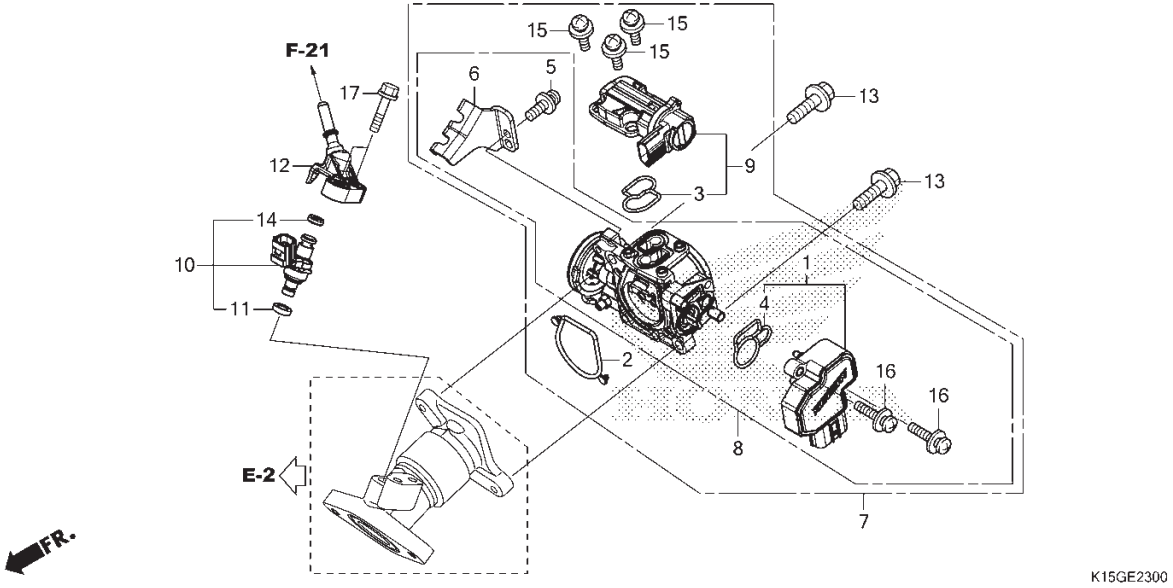

No. Ref.	L.O.N.	(Nomor ref. relatif) Deskripsi	F.R.T.
1		(4)	
	617115	SENSOR, THROTTLE	0,7
7		(2)	
	311132	BODY ASSY., THROTTLE	0,8
8	311130	BODY, THROTTLE	0,8
9		(3)	
	3111N5	VALVE, IDLE AIR CONTROL	0,7
10		(11,12,14)	
	311145	INJECTOR, FUEL	0,8

No. Ref.	No. Part	Deskripsi	Jumlah CB150R (CB150R) 2015(G)	No. Seri	Kode Parts Catalog
1	16060-KVS-J01	SENSOR SET	1		
2	16075-K40-F01	O-RING, THROTTLE BODY	1		
3	16076-K35-V01	O-RING	1		
4	16077-K35-V01	O-RING	1		
5	16081-K56-N01	SCREW-WASHER, TORX(5X12)	1		
6	16169-K56-N01	STAY, WIRE	1		
7	16400-K56-N01	THROTTLE BODY ASSY.(GQ1LA A) ..	1		
8	16410-K56-N01	BODY SET	1		
9	16430-K56-N01	VALVE SET, IDLE AIR CONTROL ...	1		
10	16450-K15-921	INJECTOR ASSY., FUEL	1		
11	16472-KPC-D51	RING, SEAL	1		
12	17560-K56-N00	JOINT COMP., INJECTOR	1		
13	90004-GHB-650	BOLT, FLANGE, 6X20	2		
14	91301-GGL-J02	O-RING, 6.3X2.2	1		
15	93891-04010-18	SCREW-WASHER, 4X10	3		
16	93891-04016-18	SCREW-WASHER, 4X16	2		
17	95701-06022-01	BOLT, FLANGE, 6X22	2		