F-17 REAR BRAKE CALIPER

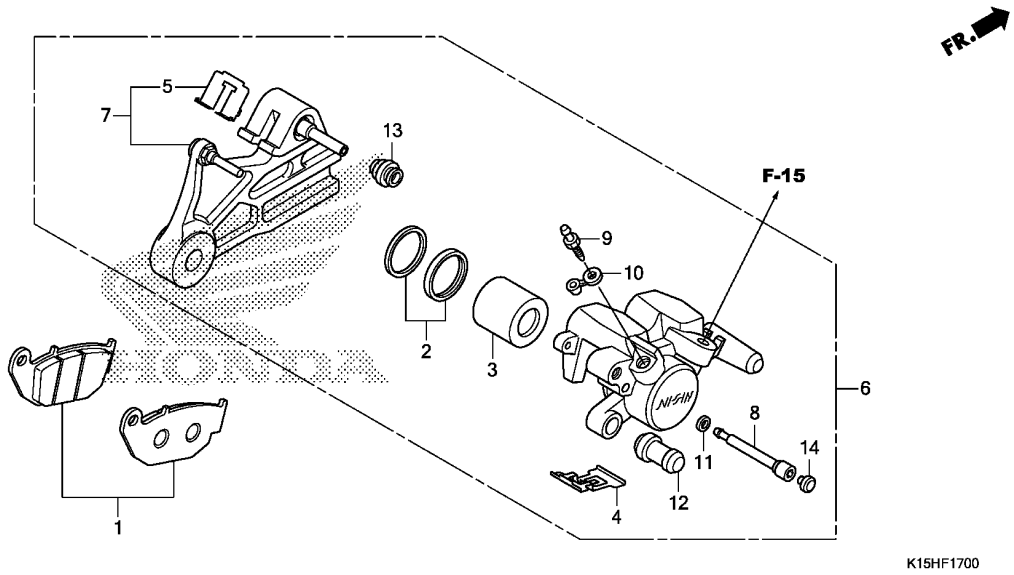

Ref. No.	L.O.N.	(Relative ref. Number) Description	F.R.T.
1	711140	SHOE(PAD) SET, BRAKE :REAR ---	0.1
3		(2)	
	7111D5	PISTON, REAR BRAKE CALIPER ---	0.7
		.INCLUDES: Bleed brakes	
6	711155	CALIPER, REAR BRAKE ----------	0.6
		.INCLUDES: Bleed brakes	
7	7111C1	BRACKET, REAR CALIPER --------	0.4

Ref. No.	Part No.	Description	Reqd. QTY CB 150R H	Serial No.	Parts catalogue code
1	06435-KRE-G31	PAD SET, RR. ----------	1		
2	06451-MA7-405	SEAL SET, PISTON ----------	1		
3	43107-MA7-006	PISTON ----------	1		
4	43108-KSP-B51	SPRING, PAD(NISSIN) ---------	1		
5	43112-KSP-B01	RETAINER ----------	1		
6	43150-KSP-B02	CALIPER SUB ASSY., RR.(NISSIN)	1		
7	43190-KSP-B01	BRACKET SUB ASSY., RR. ------	1		
8	43215-KGH-901	PIN, HANGER ----------	1		
9	43352-568-003	SCREW, BLEEDER(NISSIN) ------	1		
10	43353-461-771	CAP, BLEEDER ----------	1		
11	45111-MAJ-G41	RING, STOPPER ----------	1		
12	45132-166-016	BOOT, PIN BUSH(NISSIN) ------	1		
13	45133-MA3-006	BOOT B ----------	1		
14	45203-MCC-006	PLUG, PIN ----------	1		