F-14-40 FRONT WHEEL

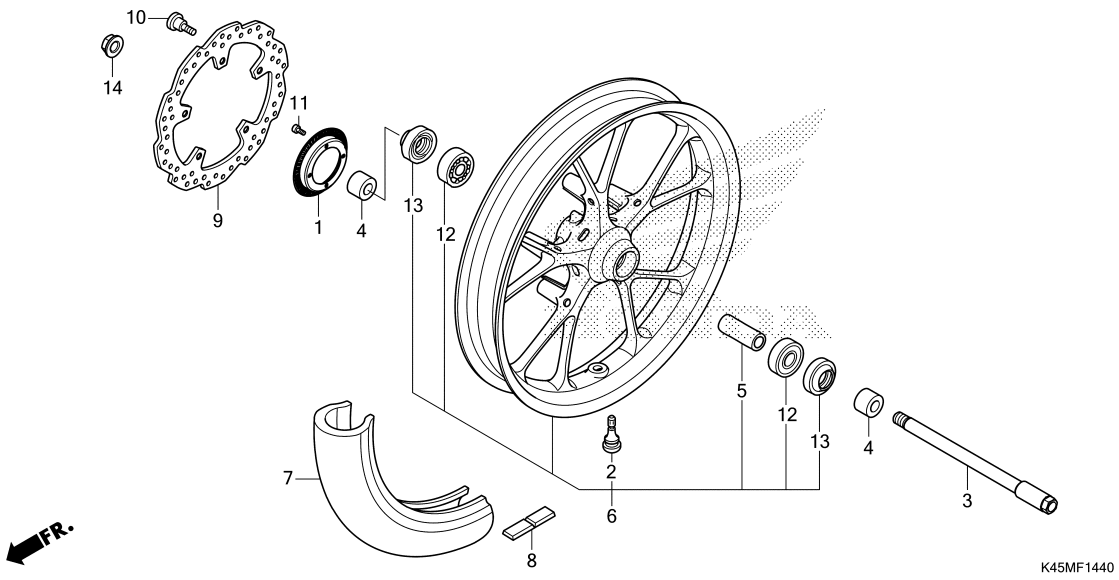

Ref. No.	L.O.N.	(Relative ref. Number) Description	F.R.T.
1	7101B0	RING, PULSER :FRONT ·····	0.4
3		(13)	
	710151	AXLE, FRONT WHEEL ·····	0.3
6	7101D4	FRONT WHEEL ·····	1.0
		.INCLUDES: Balance	
7	710139	FRONT TIRE(ONE) ·····	0.9
		.INCLUDES: Balance	
8	7101A6	WEIGHT, BALANCE :FRONT ·····	0.6
9	711120	DISC, FRONT BRAKE ·····	0.4
12	710115	BEARING, FRONT WHEEL(ONE) ····	0.5
	710115G	.Replace 1 bearing add ·····	0.1

Ref. No.	Part No.	Description	Reqd. QTY CBR 150RA M	Serial No.	Parts catalogue code
1	42515-K40-F10	RING, RR. PULSER····· (FOR FR.)	1		
2	42753-GM9-743	VALVE, RIM(IRC)·····	1		
	42753-KWF-901	VALVE, RIM(TRITON)·····	1		
	42753-ML7-004	VALVE, RIM(DUNLOP)·····	1		
3	44301-K45-NL0	AXLE, FR. WHEEL·····	1		
4	44311-K45-N00	COLLAR, FR. WHEEL SIDE·····	2		
5	44620-K15-920	COLLAR, FR. AXLE DISTANCE····	1		
6	44650-K45-NB0ZB	WHEEL SUB ASSY., FR.(WOL) *NH303M* MAT AXIS GRAY METALLIC	1	-------- --------	9MA,MA
7	44711-K45-N01	TIRE, FR.(IRC) (100/80-17 M/C 52P)	1		
8	44721-MGH-H21	WEIGHT, BALANCE(10G)·····	N		
	44722-MGH-H21	WEIGHT, BALANCE(15G)·····	N		
	44723-MGH-H21	WEIGHT, BALANCE(20G)·····	N		
9	45251-K15-601	DISK, FR. BRAKE·····	1		
10	90105-KGH-900	BOLT, BRAKE DISK, 8X24·····	5		
11	90131-K64-N10	BOLT, TORX, 5X10·····	4		
12	91053-K03-H01	BEARING, RADIAL BALL(6301U L) (NTN)	2		
	91053-K03-H02	BEARING, RADIAL BALL(6301U L) (FAG)	2		
	91053-K03-N41	BEARING, RADIAL BALL(6301U L) (SKF)	2		