AIR CLEANER

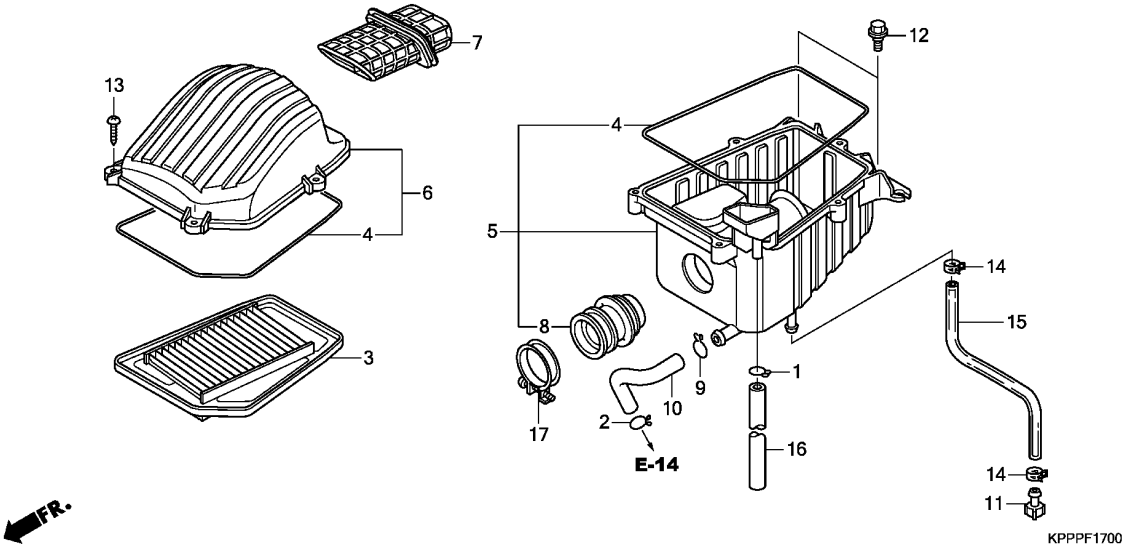

Ref. No.	L.O.N.	(Relative ref. Number) Description	F.R.T.
3	312105	ELEMENT, AIR CLEANER	0.6
5	3121A5	CASE, AIR CLEANER	0.7
6	312102	COVER, AIR CLEANER CASE	0.6
7	312125	DUCT, AIR CLEANER	0.6
8	3121B6	TUBE, AIR CLEANER CONNECTING	0.8

Ref. No.	Part No.	Description	Reqd. QTY CBR150R B	C	Serial No.	Parts catalogue code
1	15772-292-010	CLIP, BREATHER TUBE	1	1		
2	15772-551-000	CLIP, BREATHER TUBE	1	1		
3	17210-KPP-T00	ELEMENT COMP., AIR CLEANER	1	1		
4	17213-KPP-900	SEAL, AIR CLEANER	2	2		
5	17225-KTY-D31	CASE SUB ASSY., AIR CLEANER	1	1		
6	17235-KTY-D31	COVER SUB ASSY., AIR CLEANER	1	1		
7	17240-KPP-T00	DUCT, INLET	1	1		
8	17253-KTY-D31	TUBE, AIR CLEANER CONNECTING	1	1		
9	17316-611-000	CLIP, BREATHER TUBE	1	1		
10	17370-KTY-D30	TUBE, BREATHER	1	1		
11	17370-419-700	PLUG, BREATHER TUBE	1	1		
12	90111-162-000	BOLT, FLANGE, 6MM	2	2		
13	93903-25510	SCREW, TAPPING, 5X25	5	5		
14	95002-41050-08	CLAMP, TUBE(D10.5)	2	2		
15	95003-23038-31	TUBE, VINYL, 8X12X380 (95003-23001-60M)	1	1		
16	17211-KPP-T00	TUBE, DRAIN	1	1		
17	95018-50250	BAND, AIR CLEANER CONNECTING TUBE(50)	1	1		