REAR CUSHION

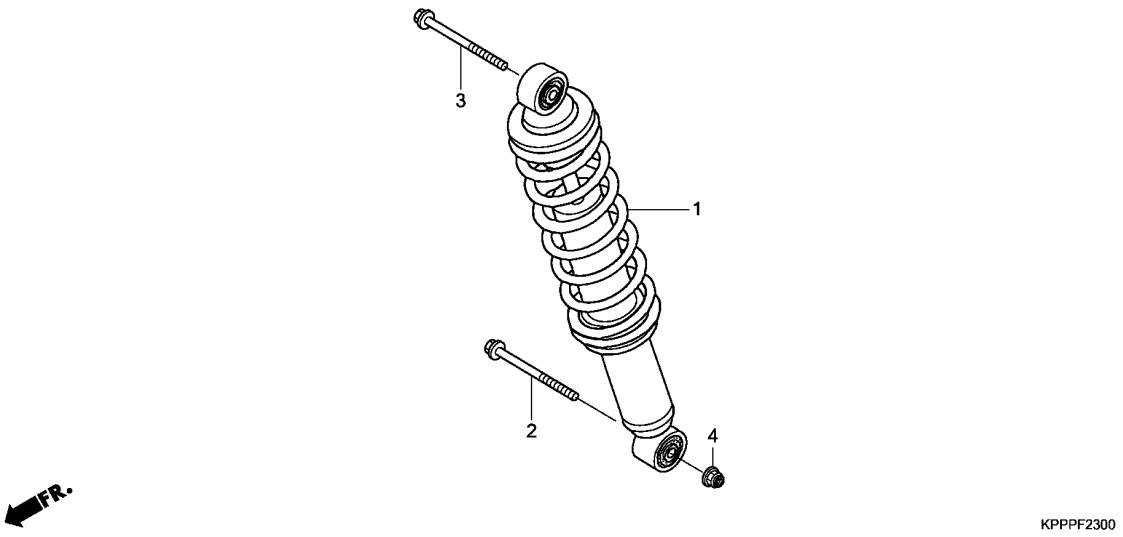

Ref. No.	L.O.N.	(Relative ref. Number) Description	F.R.T.
1	512115	CUSHION ASSY., REAR ----------	0.7

Ref. No.	Part No.	Description	Reqd. QTY CBR150R B	Reqd. QTY CBR150R C	Serial No.	Parts catalogue code
1	52400-KPP-T01	CUSHION ASSY., RR.(KYB) -----	1	1		
2	90103-KE8-003	BOLT, FLANGE, 10X46 ---------	1	-		
	90103-KPP-T00	----------	-	1		
3	90126-KT2-000	BOLT, FLANGE, 10X42 ---------	1	1		
4	90304-KGH-901	NUT, U, 10MM ----------	1	1		