E-5 CYLINDER

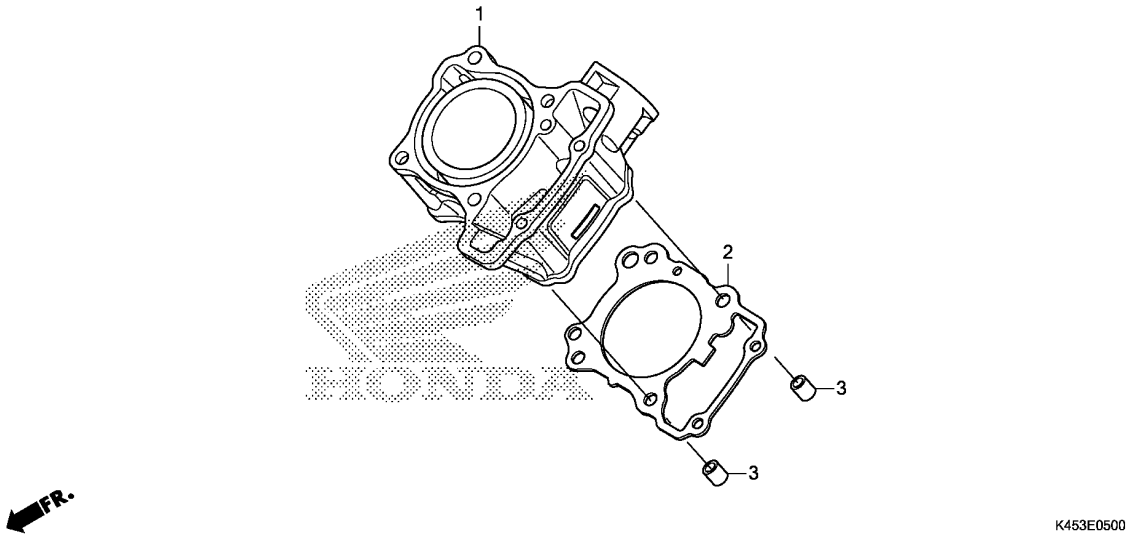

Ref. No.	L.O.N.	(Relative ref. Number) Description	F.R.T.
1	1111A5	CYLINDER	2.7
2	111102	GASKET, CYLINDER	2.6

Ref. No.	Part No.	Description	Reqd. QTY CBR 150R H	Serial No.	Parts catalogue code
1	12100-K56-N00	CYLINDER COMP.	1		
2	12191-K56-N01	GASKET, CYLINDER	1		
3	94301-10120	DOWEL PIN, 10X12	2		