FUEL TANK

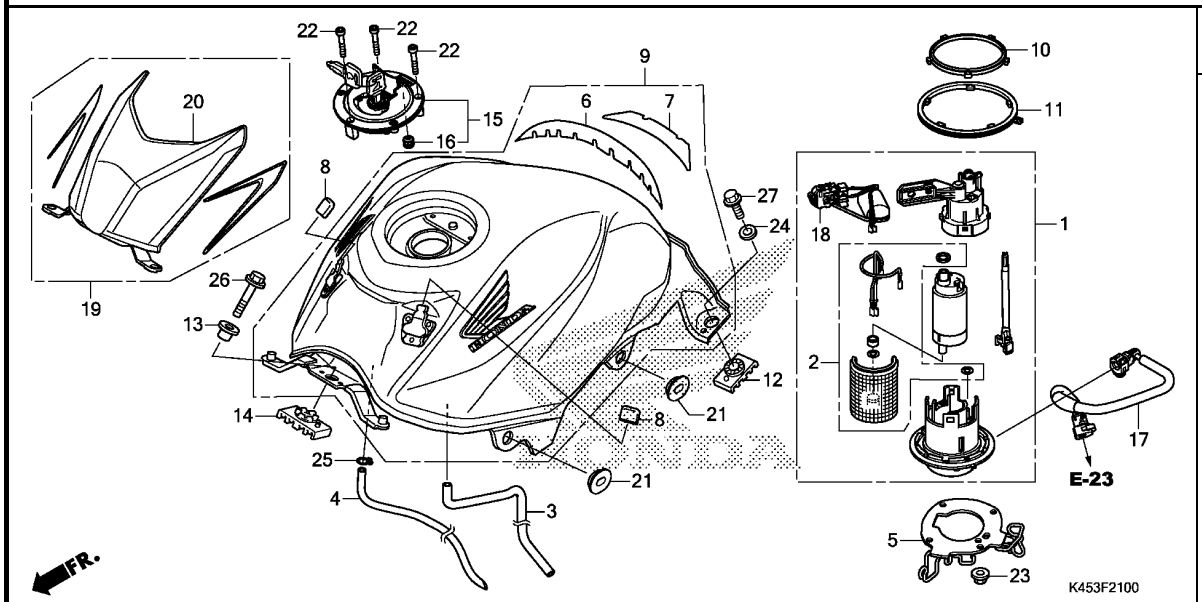

Ref. No.	L.O.N.	(Relative ref. Number) Description	F.R.T.
1		(10,11)	
	310120	PUMP ASSY., FUEL	1.0
2	3101C7	FILTER, FUEL	1.1
9	310100	TANK, FUEL	1.0
15		(16)	
	3101C1	LOCKING FUEL TANK CAP	0.1
17	310162	HOSE, FUEL FEED	0.8
18	617105	FUEL TANK SENDING UNIT	1.1
19		(20)	
	413121	COVER, FUEL TANK TOP	0.6

Ref. No.	Part No.	Description	Reqd. QTY CBR 150R H	Serial No.	Parts catalogue code
1	16700-K45-N41	PUMP ASSY., FUEL	1		
2	16707-K45-N01	FILTER SET	1		
3	17525-K45-N40	TUBE, FUEL DRAIN	1		
4	17526-K45-N40	TUBE, FUEL TANK BREATHER	1		
5	17527-K15-920	PLATE, SETTING	1		
6	17527-K45-N40	FILM A,TANK PROTECTOR	1		
7	17528-KYJ-710	FILM B, TANK PROTECTOR	1		
8	17529-K15-920	RUBBER, TANK COVER	2		
9	17530-K45-N40ZA	TANK SET, FUEL(WL)			
		TYPE3	1	-------- --------	3PH
	17530-K45-N60ZA	*TYPE1*	1	-------- --------	5PH
	17530-K45-N40ZB	*TYPE2*	1	-------- --------	PH
10	17572-GHB-611	GASKET, FUEL PUMP	1		
11	17573-GHB-601	SEAL, DUST	1		
12	17613-K45-N00	CUSHION, FUEL TANK(C)	2		
13	17614-K45-N00	COLLAR, FUEL TANK	1		
14	17615-K45-N00	CUSHION, FUEL TANK(A)	1		
15	17620-KRE-G01	CAP COMP., FUEL FILLER	1		
16	17621-KRE-G01	SEAL, BREATHER	1		
17	17650-K15-921	HOSE COMP., FUEL FEED	1		
18	37800-K45-N41	FUEL UNIT	1		
19	64510-K45-N40ZA	COVER SET, FUEL TANK(WL)			
		TYPE2	1	-------- --------	PH
20	64511-K45-N40ZA	COVER, FUEL TANK			
		YR271.....NITRIC ORANGE	1	-------- --------	3PH
	64511-K45-N40ZB	*R258*.....WINNING RED	1	-------- --------	5PH