F-39 FRAME BODY

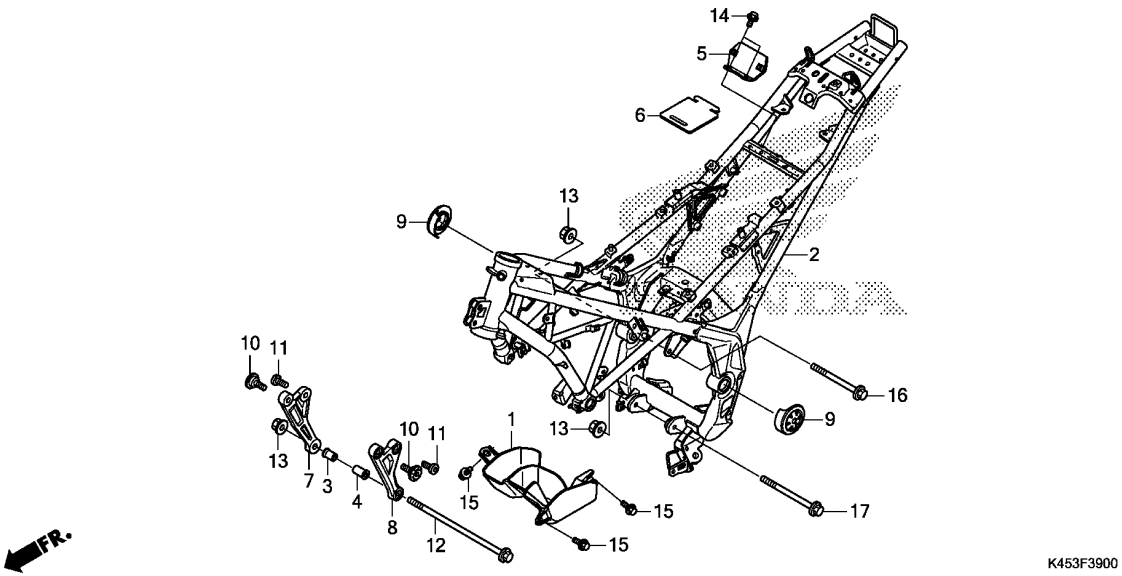

Ref. No.	L.O.N.	(Relative ref. Number) Description	F.R.T.
1	413153	TRAY, REAR	0.1
2	410100	BODY, FRAME .INCLUDES: Engine removal and installation	5.9

Ref. No.	Part No.	Description	Reqd. QTY CBR 150R H	Serial No.	Parts catalogue code
1	17411-K45-N40	COVER, RELAY	1		
2	50100-K45-N40	BODY COMP., FRAME	1		
3	50122-K15-920	COLLAR, R. ENGINE MOUNTING	1		
4	50123-K15-920	COLLAR, L. ENGINE MOUNTING	1		
5	50206-K45-N40	STAY, REGULATOR	1		
6	50234-K45-N40	RUBBER, CROSS PLATE GUARD	1		
7	50351-K15-920	BRACKET, R. ENGINE HANGER	1		
8	50352-K15-920	BRACKET, L. ENGINE HANGER	1		
9	52161-K45-N40	CAP, RR. FORK PIVOT	2		
10	90103-K15-920	BOLT, SPECIAL, 8X22	2		
11	90104-K15-920	BOLT, SOCKET, 8X20	2		
12	90111-K15-920	BOLT, FLANGE, 10X239	1		
13	94050-10000	NUT, FLANGE, 10MM	3		
14	95701-06010-08	BOLT, FLANGE, 6X10	2		
15	95701-06012-07	BOLT, FLANGE, 6X12	3		
16	95701-10120-00	BOLT, FLANGE, 10X120	1		
17	95701-10130-00	BOLT, FLANGE, 10X130	1		