FRONT FENDER

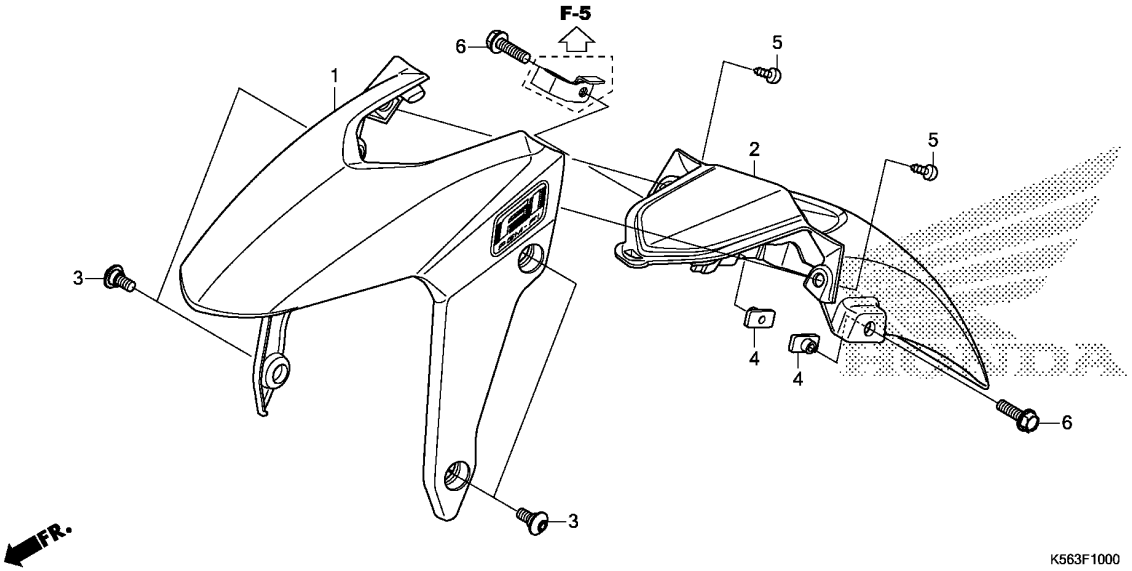

Ref. No.	L.O.N.	(Relative ref. Number) Description	F.R.T.
1	413103	FENDER A, FRONT	0.2
2	413104	FENDER B, FRONT	0.2

Ref. No.	Part No.	Description	Reqd. QTY FS 150R G	Serial No.	Parts catalogue code
1	61000-K56-N20ZA	FENDER SET A, FR.(WL)			
		TYPE1	1	-------- --------	2PH
	61000-K56-N00ZA	*TYPE4*	1	-------- --------	PH
	61000-K56-N00ZB	*TYPE3*	1	-------- --------	PH
	61000-K56-N00ZD	*TYPE1*	1	-------- --------	PH
2	61200-K56-N00	FENDER B, FR.	1		
3	90133-K56-N00	SCREW, PAN, 6X14	4		
4	90301-K03-N30	NUT, SPECIAL, 6MM	2		
5	93904-25210	SCREW, TAPPING, 5X12	2		
6	96001-06025-07	BOLT, FLANGE, 6X25	2		