F-31 STAND

G11

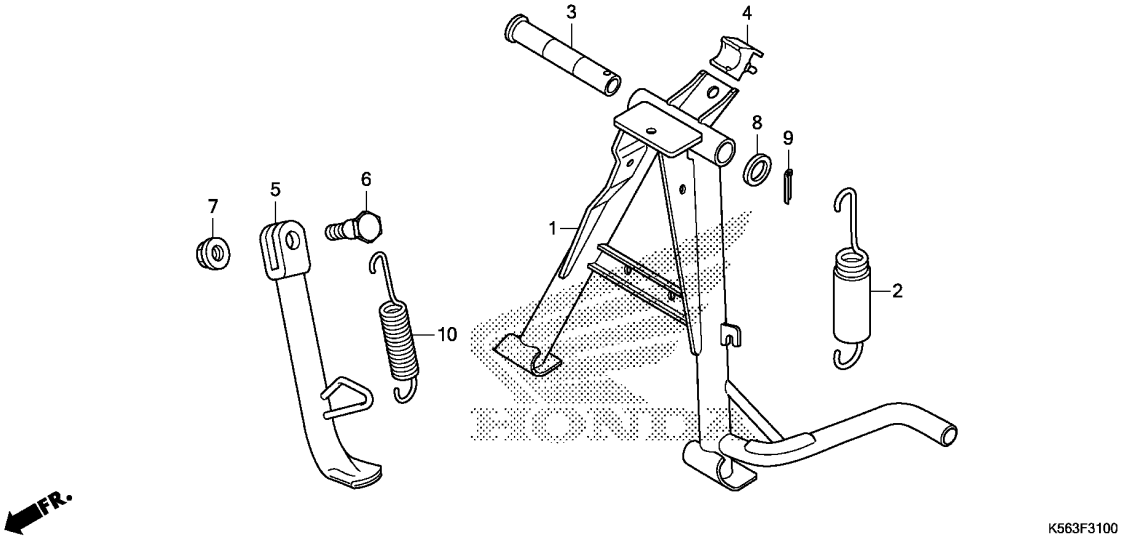

Ref. No.	L.O.N.	(Relative ref. Number) Description	F.R.T.
1		(3)	
	410175	STAND, MAIN	0.5
2	410176	SPRING, MAIN STAND	0.2
5	410180	BAR, SIDE STAND	0.2
10	410182	SPRING, SIDE STAND	0.1

Ref. No.	Part No.	Description	Reqd. QTY FS 150R G	Serial No.	Parts catalogue code
1	50500-K56-N00	STAND COMP., MAIN	1		
2	50505-K15-900	SPRING ASSY., MAIN STAND	1		
3	50512-KAN-960	PIPE, MAIN STAND PIVOT	1		
4	50524-KBP-900	RUBBER, STAND STOPPER	1		
5	50530-K56-N00	BAR COMP., SIDE STAND	1		
6	90107-GN1-010	SCREW, SIDE STAND PIVOT	1		
7	90304-KGH-901	NUT, U, 10MM	1		
8	90521-028-000	WASHER, 17X22	1		
9	94201-30250	PIN, SPLIT, 3.0X25	1		
10	95014-72302	SPRING C, SIDE STAND	1		