FRAME BODY

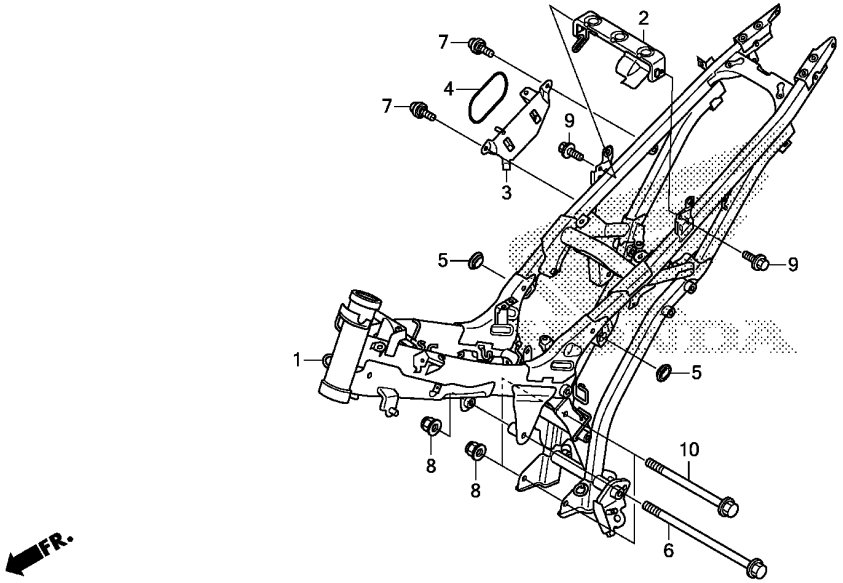

Ref. No.	L.O.N.	(Relative ref. Number) Description	F.R.T.
1	410100	BODY, FRAME ---------- .INCLUDES: Engine removal and installation	5.6

Ref. No.	Part No.	Description	Reqd. QTY FS 150R G	Serial No.	Parts catalogue code
1	50100-K56-N00	BODY COMP., FRAME ----------	1		
2	50195-K56-N00	BRACKET, SEAT ----------	1		
3	64800-K56-N00	TRAY, PGM-FI UNIT ----------	1		
4	80123-KCC-870	BAND, TOOL ----------	1		
5	83551-GE2-000	GROMMET, AIR CLEANER CASE ---	2		
6	90101-K28-910	BOLT, FLANGE, 10X155 --------	1		
7	91509-GE2-760	SCREW, PAN, 5X11.5 ----------	2		
8	94050-10000	NUT, FLANGE, 10MM ----------	3		
9	95701-06010-00	BOLT, FLANGE, 6X10 ----------	2		
10	95701-10115-00	BOLT, FLANGE, 10X115 --------	2		