# F-15 BODY COVER

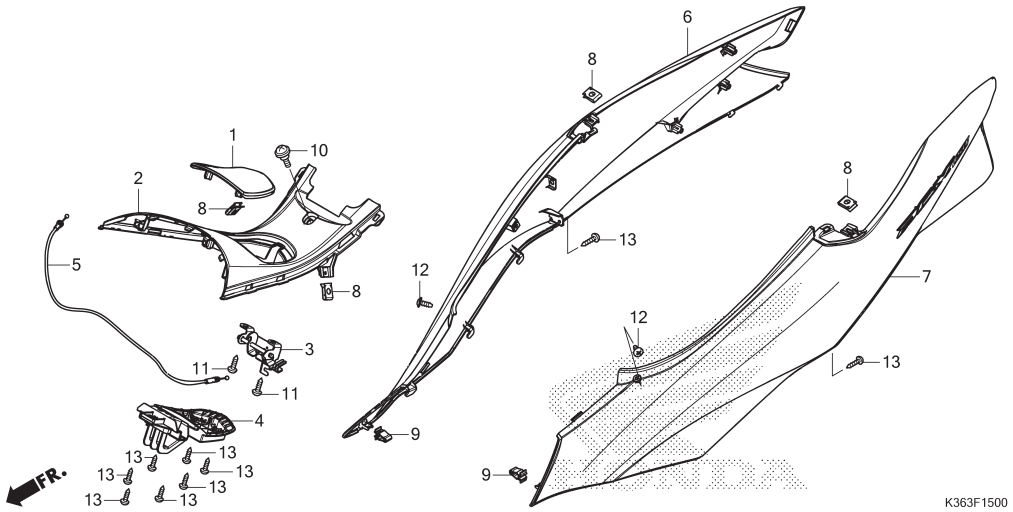


| No. Ref. | L.O.N. | (Nomor ref. relatif) Deskripsi | F.R.T. |
|---|---|---|---|
| 1 | 3101B8 | LID, FUEL | 0,1 |
| 2 | 4131Z7 | COVER, CENTER | 2,5 |
| 3 | 3101B7 | LOCK, FUEL LID | 2,5 |
| 4 | 4131V0 | HINGE, FUEL LID | 2,5 |
| 5 | 8111B6 | CABLE, FUEL LID | 2,4 |
| 6 | 4131J0 | COVER, BODY :RIGHT | 0,7 |
| 7 | 4131H9 | COVER, BODY :LEFT | 0,7 |
| | 4131J1 | COVER, BODY :KEDUA-DUANYA | 0,8 |

| No. Ref. | No. Part | Deskripsi | Jumlah PCX150 EX F | No. Seri | Kode Parts Catalog |
|---|---|---|---|---|---|
| 1 | 64405-K35-V00ZA | LID, FUEL | | | |
| | | *NH1* ..... BLACK | 1 | | |
| 2 | 64410-K35-V00ZA | COVER, CENTER | | | |
| | | *NH1* ..... BLACK | 1 | | |
| 3 | 64440-K35-V00 | LOCK ASSY., FUEL LID | 1 | | |
| 4 | 64450-K35-V01 | HINGE ASSY., FUEL LID | 1 | | |
| 5 | 64455-K35-V01 | CABLE COMP., FUEL LID | 1 | | |
| 6 | 83550-K35-V00ZB | SET, ILLUST R. BODY (WL) | | | |
| | | *R350C* ..... CANDY RED NOBLE | 1 | | |
| | 83550-K35-V00ZC | SET, ILLUST R. BODY (WL) | | | |
| | | *NHB35P* ..... PEARL JASMINE WHITE | 1 | | |
| | 83550-K35-V00ZD | SET, ILLUST R. BODY(WL) | | | |
| | | *NHB25M* ..... POSEIDON BLACK METALLIC | 1 | | |
| 7 | 83650-K35-V00ZB | SET, ILLUST L. BODY(WL) | | | |
| | | *R350C* ..... CANDY RED NOBLE | 1 | | |
| | 83650-K35-V00ZC | SET, ILLUST L. BODY(WL) | | | |
| | | *NHB35P* ..... PEARL JASMINE WHITE | 1 | | |
| | 83650-K35-V00ZD | SET, ILLUST L. BODY(WL) | | | |
| | | *NHB25M* ..... POSEIDON BLACK METALLIC | 1 | | |
| 8 | 90302-KWW-A00 | NUT, SPRING, 4MM | 4 | | |
| 9 | 90601-SJA-003 | CLIP, SNAP FITTING | 2 | | |
| 10 | 91509-GE2-760 | SCREW, PAN, 5X11.5 | 1 | | |
| 11 | 93903-25320 | SCREW, TAPPING, 5X16 | 2 | | |
| 12 | 93903-34380 | SCREW, TAPPING, 4X12 | 2 | | |
| 13 | 93903-34420 | SCREW, TAPPING, 4X16 | 9 | | |