Block No.

E-1

Cylinder head

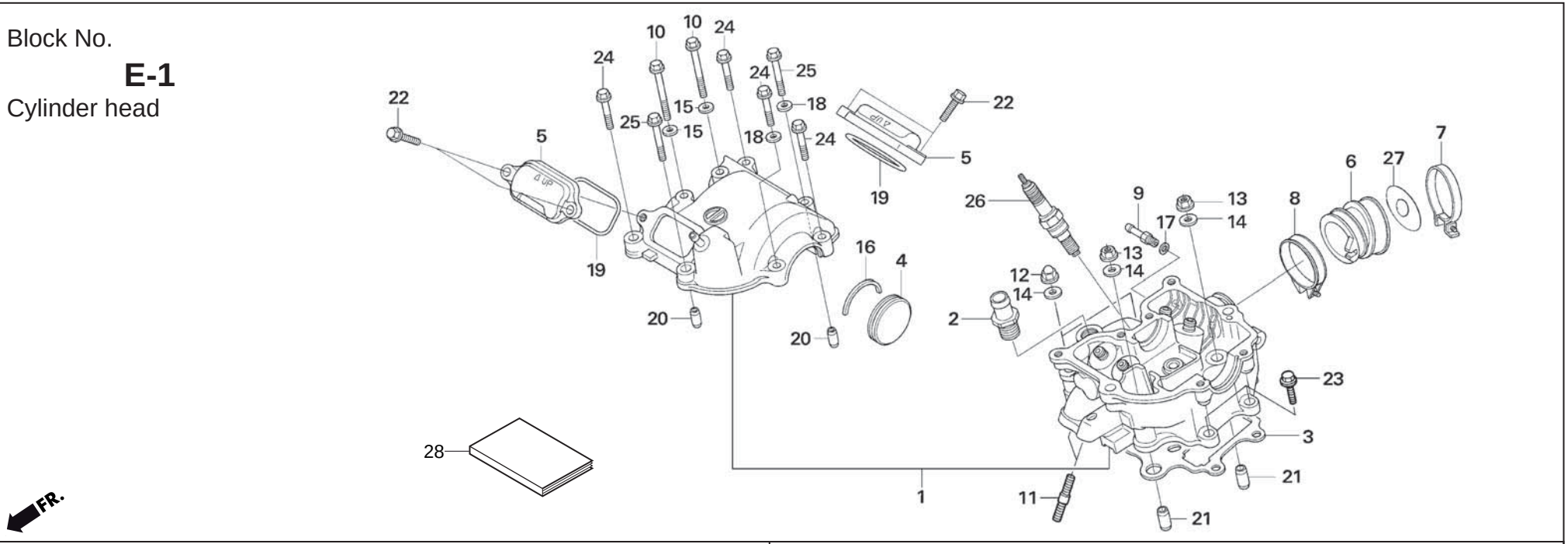

Ref.No.	Part No.	Description	Qty. '14
1	12010-NN4-000	HEAD SET, CYLINDER	1
2	12203-KA5-690	JOINT, PIPE 13	1
3	12251-KRN-731	GASKET, CYLINDER HEAD	1
4	12312-NN4-000	CAP, CYLINDER HEAD SIDE	1
5	12351-NN4-000	COVER, TAPPET ADJ HOLE	2
6	16211-NN4-000	INSULATOR, THROTTLE BODY	1
7	16215-NN4-000	BAND, INSULATOR	1
8	16216-MCZ-000	BAND, INSULATOR A	1
9	17113-KSC-670	JOINT, BOOST	1
10	90002-NN4-000	BOLT, SPECIAL 6X50	2
11	90041-NN4-000	BOLT, STUD 2.7X17	2
12	90232-MB6-680	NUT 9MM, CAP	2
13	90233-MM4-000	NUT FLANGE 9mm	2
14	90401-KRN-670	WASHER, PLAIN 9mm	4
15	90441-MR1-770	WASHER, SEALING	2
16	90446-NN4-000	WASHER, CAM SHAFT THRUST	1
17	90452-323-000	WASHER, 5MM	1
18	90463-ML7-000	WASHER, SEALING, 6.5mm	2
19	91303-436-003	O-RING, 43X2.5	2
20	94301-08140	DOWEL PIN, 8X14	2
21	94301-12200	DOWEL PIN, 12X20	2
22	96001-06020-00	BOLT, FLANGE, 6X20	4
23	96001-06022-00	BOLT, FLANGE, 6X22	2
24	96001-06028-00	BOLT, FLANGE, 6X28	4
25	96001-06035-00	BOLT, FLANGE, 6X35	2
26	98059-56916-00	SPARK PLUG, CR6EH-9	1
27	16213-NN4-J10	INSOLATE PLATE (ED / 2E)	1
28	62NN4JEMH	SHOP / OWNER'S MANUAL (ENGLISH)	1
	65NN4JSMH	SHOP / OWNER'S MANUAL (ESPAÑOL)	1
	64NN4JGMH	SHOP / OWNER'S MANUAL (DEUTSH)	1
	69NN4JIMH	SHOP / OWNER'S MANUAL (ITALIANO)	1
	63NN4JFMH	SHOP / OWNER'S MANUAL (FRANÇAIS)	1