Block No.

F-1

Cable
Switch

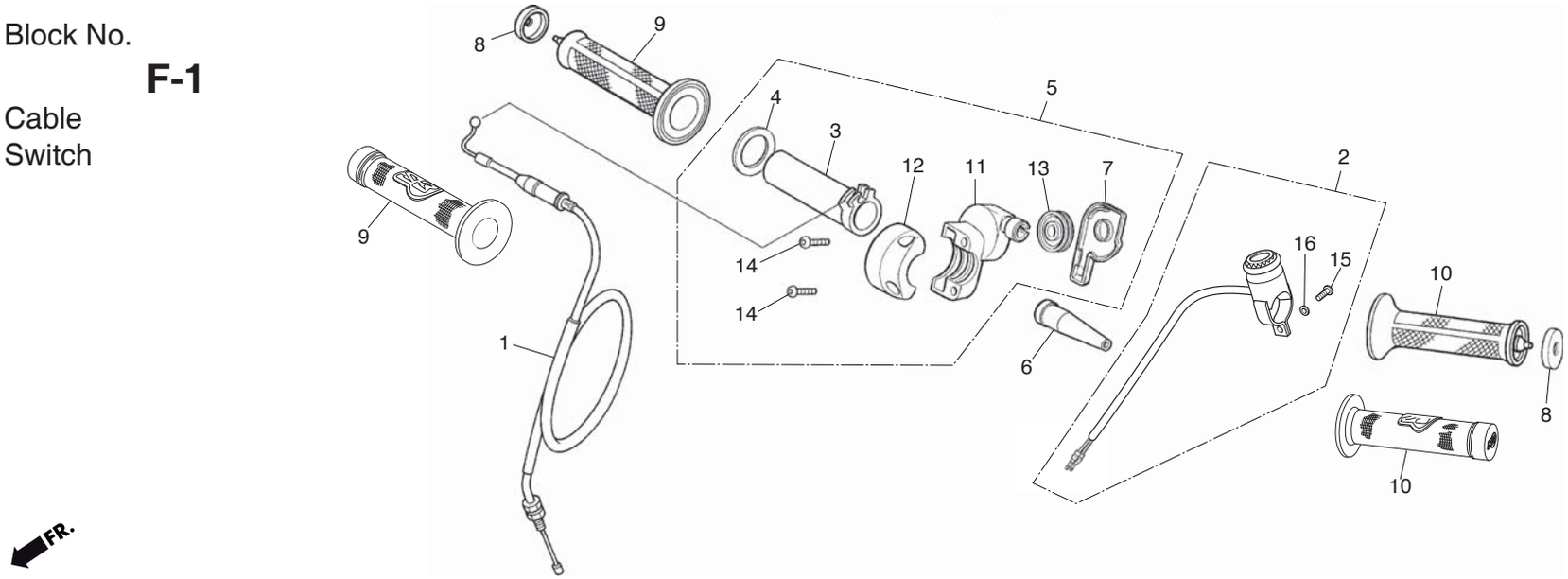

Ref.No.	Part No.	Description	Qty. '15
1	17910-NN4-B01	CABLE COMP., THROT	1
2	35130-NN4-610	SW ASSY., KILL	1
3	53141-NN4-000	PIPE, THROT GRIP	1
4	53142-NN3-000	RING, LEAF	1
5	53160-NN4-000	SUB ASSY., THROTTLE	1
6	53161-NN3-000	COVER, THROT CABLE	1
7	53163-NN2-900	COVER, THROT HOUSING	1
8	53164-KR8-000	COVER, GRIP END (2E / 4E)	2
9	53165-NN4-J10	GRIP R, HANDLE (ED / 3E)	1
	53165-KR8-000	GRIP R, HANDLE (2E / 4E)	1
10	53166-NN4-J10	GRIP L, HANDLE (ED / 3E)	1
	53166-KR8-000	GRIP L, HANDLE (2E / 4E)	1
11	53167-NN2-900	HOUSING UP, THROT	1
12	53168-NN2-900	HOUSING LWR, THROT	1
13	53169-NN2-900	PULLEY, THROT	1

Ref.No.	Part No.	Description	Qty. '15
14	90107-NN3-000	SOCKET BOLT, 5X16	2
15	93500-04012-1A	SCREW, PAN 4X12	1
16	94111-04000	WASHER, SPRING 4mm	1