Block N.º

E-16

Throttle body
Injector

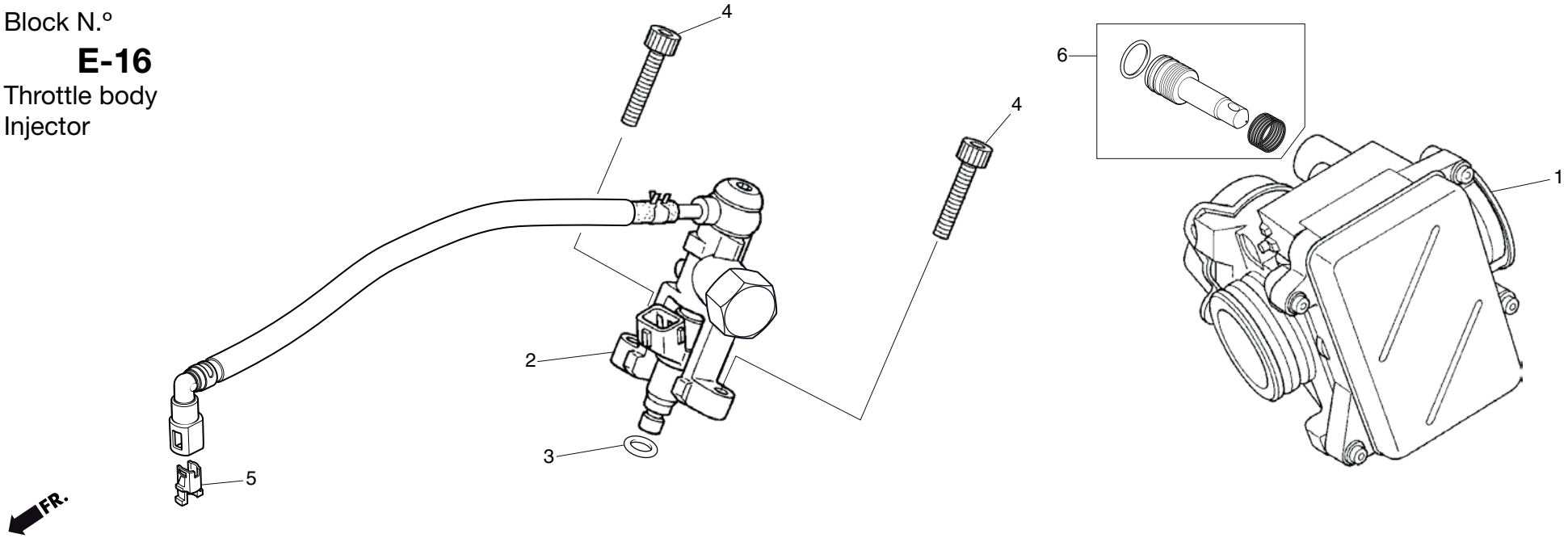

No.	Part Number	Description	Qty.	No.	Part Number	Description	Qty.
1	16400-NN4-M11	THROTTLE BODY ASSY (ED/2ED)	1				
	16400-NN4-L31	THROTTLE BODY ASSY (3ED/4ED)	1				
2	16420-NN4-L10	HOLDER INJECTOR ASSY.	1				
3	91302-PNA-003	O-RING, 7.8X1.9	1				
4	96700-06022-00	SOCKET BOLT 6X22	2				
5	17711-S0X-931	RETAINER	1				
6	16016-NN4-003	SCREW SET	1				