Block N.º

F-13 (3ED/4ED)

Fuel tank
Fuel pump

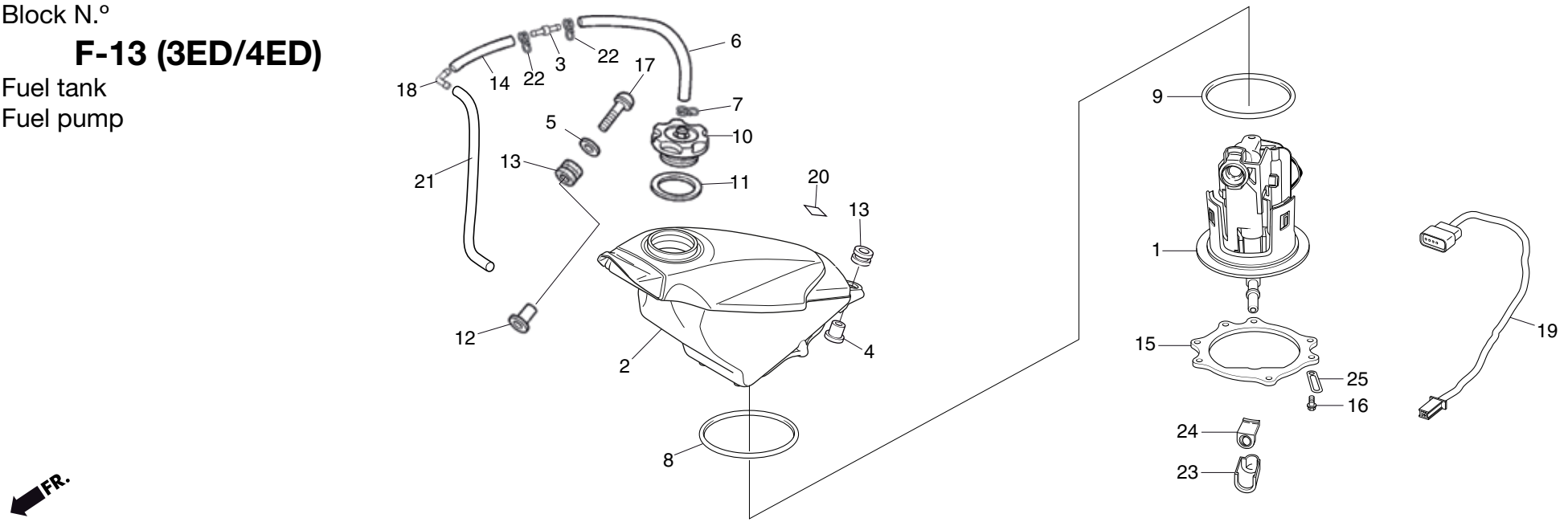

No.	Part Number	Description	Qty.	No.	Part Number	Description	Qty.
1	16700-NX7-003	UNIT ASSY., FUEL PUMP	1	16	90106-KRN-000	BOLT,FLANGE 5X12	7
2	17500-NN4-M30	SET, FUEL TANK (WITH STRIP MONTESA) (3ED)	1	17	90115-NN4-000	BOLT, SPL, 6X27	1
	17500-NN4-L20	SET, FUEL TANK (WITH STRIP MONTESA) (4ED)	1	18	19114-NN4-600	JOINT 2 WAY	1
3	17625-NF4-003	VALVE	1	19	32103-NN4-L10	SUB HARNESS FUEL PUMP	1
4	17509-NN4-000	COLLAR, TANK SET	1	20	87586-KPC-870	LABEL, FUEL	1
5	90501-NN4-G00	WASHER 6 mm	1		87586-MKF-D40	LABEL, E10 / 95+ FUEL (✶)	1
6	17523-NN4-G00	TUBE, FUEL CAP BREATHER	1	21	17521-NN4-G00	TUBE, FUEL CAP BREATHER	1
7	95002-02129	CLIP B12	1	22	95002-02100	CLIP B10	2
8	16712-MEN -A30	O-RING 2,4X88,4	1	23	17575-MEN -A30	COVER, FUEL CONNECTOR	1
9	16711-MEN-A30	O-RING 3,7X73,9	1	24	17576-MEN -A30	RUBBER, FUEL CONNECTOR	1
10	17621-NN4-000	BODY, FUEL CAP	1	25	90106-KJ6-740	CLIP TUBE	1
11	17624-NN4-000	PACKING, FUEL CAP	1				
12	61104-357-000	COLLAR, FR FENDER	1				
13	64615-KR1-860	RUBBER, LWR COWL MOUNT	2				
14	95005-55035-20	TUBE 5,3 x 35	1				
15	17519-NN4-L10	PLATE,FUEL PUMP	1				