Block No.

F-13

Fuel tank
Fuel pump

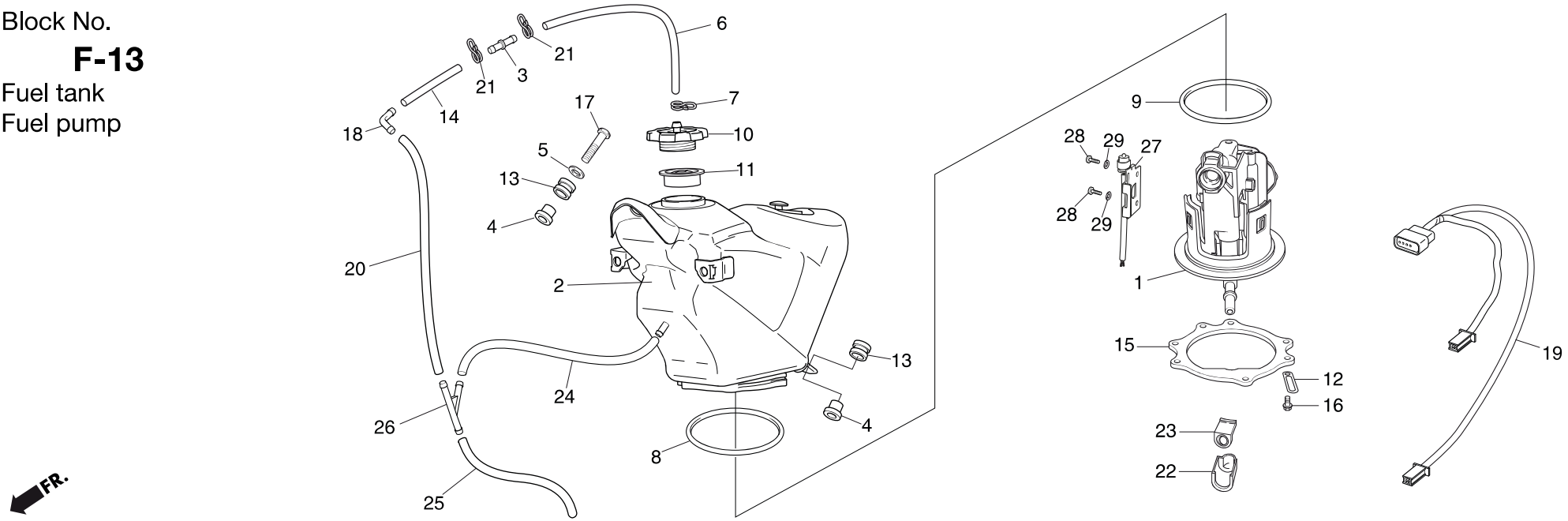

No.	Part Number	Description	Qty.	FRT	No.	Part Number	Description	Qty.	FRT
1	16700-NX7-003	UNIT ASSY., FUEL PUMP	1	0.5	17	90115-NN4-000	BOLT, SPL, 6X27	1	—
2	17510-NN4-M80ZB	SET, FUEL TANK	1	0.4	18	19114-NN4-600	JOINT 2 WAY	1	—
3	17625-NF4-003	VALVE	1	—	19	32103-NN4-P80	SUB HARNESS FUEL PUMP	1	—
4	61104-357-000	COLLAR, FR FENDER	2	—	20	17521-NN4-M10	DRAIN TUBE A	1	—
5	90501-NN4-G00	WASHER 6 mm	1	—	21	95002-02100	CLIP B10	2	—
6	17523-NN4-G00	TUBE, FUEL CAP BREATHER	1	—	22	17575-MEN -A30	COVER, FUEL CONNECTOR	1	—
7	95002-02129	CLIP B12	1	—	23	17576-MEN -A30	RUBBER, FUEL CONNECTOR	1	—
8	16712-MEN -A30	O-RING 2,4X88,4	1	0.5	24	17524-NN4-M10	DRAIN TUBE B	1	—
9	16711-MEN-A30	O-RING 3,7X73,9	1	0.5	25	17522-NN4-M10	DRAIN TUBE C	1	—
10	17621-NN4-M10	FUEL CAP	1	—	26	16180-ML6-671	3 WAY JOINT	1	—
11	17624-NN4-M10	PACKING, FUEL CAP	1	—	27	37800-NN4-P80	SENSOR FUEL RESERVE	1	—
12	90106-KJ6-740	CLIP TUBE	1	—	28	90095-NN4 -P80	SCREW TAPPING 2,9x9,5	2	—
13	64615-KR1-860	RUBBER, LWR COWL MOUNT	2	—	29	90428-NN4 -P80	WASHER	2	—
14	95005-55035-20	TUBE 5,3 x 35	1	—					
15	17519-NN4-L10	PLATE,FUEL PUMP	1	—					
16	90106-KRN-000	BOLT,FLANGE 5X12	7	—					