H 3

F-14

Fuel tank

Réservoir d'essence

Benzintank

Tanque de combustible

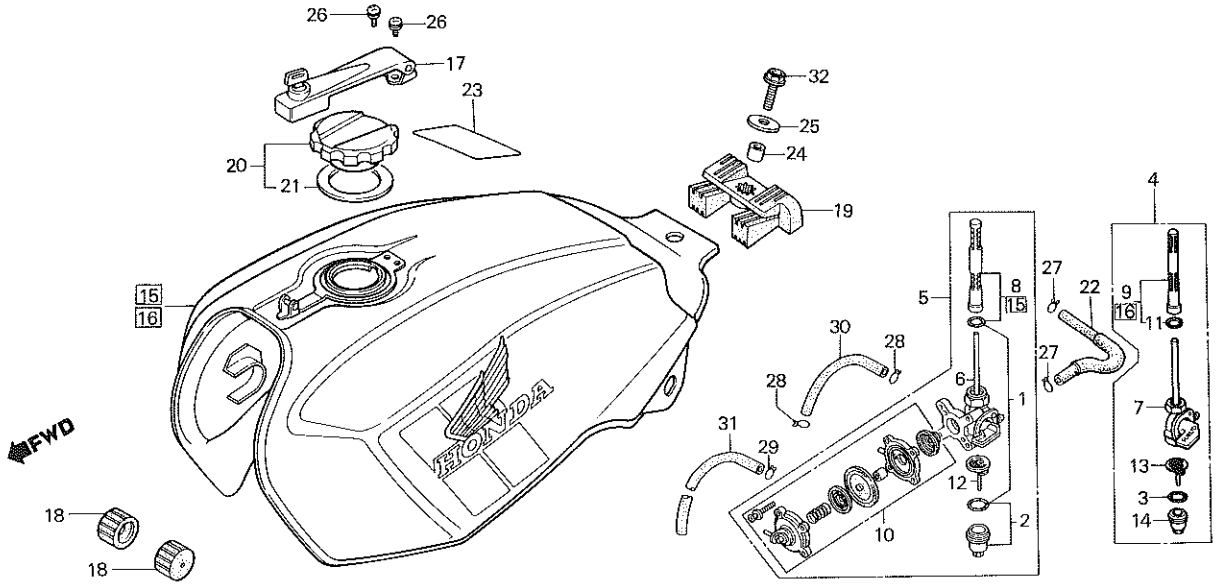

BMC8—30

Service item	F.R.T.	Ref. No.	Part No.	Description	Reqd. No. FT500 C	Serial No.	Area code
		31	95005-35570-30	TUBE, 3.5X570	1		CM
		32	95700-08025-00®	BOLT, FLANGE, 8X25	1		

1982.01.20 H3